Polo 1995 ➤

Simos injection and ignition system

Engine ID	ARC	AVY							

Edition 10.1999

Protected by copyright. Copying for private or commercial purposes, in part or in whole, is not permitted unless authorised by Volkswagen AG. Volkswagen AG does not guarantee or assume any liability with respect to the correctness of information in this document. Copyright by Volkswagen AG.

satelettronica

List of Workshop Manual Repair GroupsList of Workshop Manual Repair GroupsList of Workshop Manual Repair Groups

Polo 1995 ➤

Simos injection and ignition system

Protected by copyright. Copying for private or commercial purposes, in part or in whole, is not permitted unless authorised by Volkswagen AG. Volkswagen AG does not guarantee or accept any liability with respect to the correctness of information in this document. Copyright by Volkswagen AG.

Repair Group

01 - Self-diagnosis

24 - Mixture preparation, Injection

28 - Ignition system

satelettronica

Technical information should always be available to the foremen and mechanics, because their careful and constant adherence to the instructions is essential to ensure vehicle road-worthiness and safety. In addition, the normal basic safety precautions for working on motor vehicles must, as a matter of course, be observed.

All rights reserved.
No reproduction without prior agreement from publisher.

Copyright © 2010 Volkswagen AG, Wolfsburg

00050207420

Contents

01 - Self-diagnosis 1
1 General to self-diagnosis 1
1.1 General to self-diagnosis 1
1.2 Features of self-diagnosis 1
1.3 Technical data of self-diagnosis 1
1.4 Significance of EPC warning lamp (fault lamp for electronic accelerator) in dash panel insert 2
1.5 Significance of exhaust emissions warning lamp 3
1.6 Connecting fault reader 4
2 Fault memory 7
2.1 Fault memory 7
2.2 Automatic test sequence for interrogating all fault memories 7
2.3 Interrogating and erasing engine control unit fault memory 8
3 Fault table: SAE P0 codes 9
3.1 Fault table: SAE P0 codes 9
4 Fault table: SAE P1 codes 14
4.1 Fault table: SAE P1 codes 14
5 Final control diagnosis 22
5.1 Final control diagnosis 22
5.2 Performing final control diagnosis 22
6 Readiness code 26
6.1 Readiness code 26
6.2 Reading readiness code 26
6.3 Generating readiness code 27
7 Measured value blocks 32
7.1 Measured value blocks 32
7.2 Safety precautions 32
7.3 Read measured value block 32
8 Evaluating measured value blocks, display groups 0...9 -Basic functions- 33
8.1 Evaluating measured value blocks, display groups 0...9 -Basic functions- 33
9 Evaluating measured value blocks, display groups 10...29 -Ignition- 37
9.1 Evaluating measured value blocks, display groups 10...29 -Ignition- 37
10 Evaluating measured value blocks, display groups 30...49 -Lambda regulation- 41
10.1 Evaluating measured value blocks, display groups 30...49 -Lambda regulation- 41
11 Evaluating measured value blocks, display groups 50...69 -Speed regulation- 47
11.1 Evaluating measured value blocks, display groups 50...69 -Speed regulation- 47
12 Evaluating measured value blocks, display groups 91...95 -Performance increase- 51
12.1 Evaluating measured value blocks, display groups 91...95 -Performance increase- 51
13 Evaluating measured value blocks, display groups 120...129 -Communication- 53
13.1 Evaluating measured value blocks, display groups 120...129 -Communication- 53
24 - Mixture preparation, Injection 54
1 Servicing injection system 54
1.1 Servicing injection system 54
1.2 Fitting locations overview 54
1.3 General notes on injection 60
1.4 Removing and installing parts of the injection system 61
1.5 Dismantling and assembling intake manifold 68
1.6 Dismantling and assembling fuel rail with injectors 71
1.7 Dismantling and assembling air cleaner 74
1.8 Safety precautions 77
1.9 Rules for cleanliness 78

Protected by copyright. Copying for private or commercial purposes, in part or in whole, is not permitted unless authorised by Volkswagen AG. Volkswagen AG does not guarantee or accept any liability with respect to the correctness of information in this document. Copyright by Volkswagen AG.
satelettronica

1.10 Technical data . . . 78
2 Checking components . . . 79
2.1 Checking components . . . 79
2.2 Checking Lambda probe heating for Lambda probe before catalyst . . . 79
2.3 Checking Lambda probe heating for Lambda probe after catalyst . . . 82
2.4 Checking throttle valve control part . . . 85
2.5 Checking intake manifold pressure sender . . . 89
2.6 Checking intake air temperature sender . . . 90
2.7 Checking coolant temperature sender . . . 94
2.8 Checking engine speed sender . . . 98
2.9 Checking injectors . . . 100
2.10 Checking fuel pressure regulator and holding pressure . . . 107
2.11 Checking intake air system for leaks (unmetered air) . . . 111
3 Checking functions . . . 112
3.1 Checking functions . . . 112
3.2 Idling check . . . 112
3.3 Checking Lambda probe and Lambda regulation before catalyst . . . 113
3.4 Checking Lambda probe and Lambda regulation after catalyst . . . 118
3.5 Checking engine operating mode . . . 122
4 Engine control unit . . . 124
4.1 Engine control unit . . . 124
4.2 Function . . . 124
4.3 Checking control unit voltage supply . . . 124
4.4 Replacing engine control unit . . . 126
4.5 Coding engine control unit . . . 127
4.6 Coding variations of engine control unit . . . 128
4.7 Erasing learnt values and adapting engine control unit to throttle valve control part . . . 128
4.8 Adapting engine control unit to electronic immobilizer . . . 130
5 Checking additional signals . . . 132
5.1 Checking additional signals . . . 132
5.2 Checking speed signal . . . 132
5.3 Checking engine speed signal . . . 134
5.4 Checking signal from/to air conditioning system . . . 134
5.5 Checking signal from clutch pedal switch . . . 138
5.6 Checking signal from brake light switch and brake pedal switch . . . 140
5.7 Checking matching resistor of data bus . . . 143

28 - Ignition system . . . 145
1 Servicing ignition system . . . 145
1.1 Servicing ignition system . . . 145
1.2 General notes on ignition system . . . 145
1.3 Removing and installing parts of the ignition system . . . 146
1.4 Safety precautions . . . 148
1.5 Test data, spark plugs . . . 149
1.6 Checking Hall sender . . . 150
1.7 Checking ignition transformer . . . 151
1.8 Checking knock sensor . . . 155
1.9 Check misfiring recognition . . . 158

Protected by copyright. Copying for private or commercial purposes, in part or in whole, is not permitted unless authorised by Volkswagen AG. Volkswagen AG does not guarantee or accept any liability with respect to the correctness of information in this document. Copyright by Volkswagen AG.
satelettronica

01 - Self-diagnosis

Protected by copyright. Copying for private or commercial purposes, in part or in whole, is not permitted unless authorised by Volkswagen AG. Volkswagen AG does not guarantee or accept any liability with respect to the correctness of information in this document. Copyright by Volkswagen AG.

1 - General to self-diagnosis

1.1 - General to self-diagnosis

1.2 - Features of self-diagnosis

The Simos control unit (J361) for the fuel injection and ignition system is equipped with a fault memory.

If faults occur in the sensors and components being monitored, they will be stored in the fault memory together with an indication of the type of fault.

After evaluating the information, the engine control unit decides among different faults => Fault table page 14 and stores these until the contents of the fault memory is erased.

Faults which only occur sporadically will have the addendum "sporadic fault" on the print out. These faults will be indicated on the display by the addendum "/SP". The cause of sporadic faults can be e.g. a loose contact or a brief open circuit. If a sporadic fault does not occur again within 40 engine starts, it will be erased from the fault memory.

The faults stored can be read-out with the fault reader V.A.G 1551, the vehicle system tester V.A.G 1552 or the new tester VAS 5051 => Page 8 .

The fault memory must be erased after the faults have been rectified => Page 8 .

Note:

General information for self-diagnosis can be found in the instruction manuals for the fault reader V.A.G 1551, vehicle system tester V.A.G 1552 or the new tester VAS 5051.

1.3 - Technical data of self-diagnosis

Control unit identification

The control unit version is displayed when the fault reader V.A.G 1551, the vehicle system tester V.A.G 1552 or the new tester VAS 5051 is connected and engine electronics control unit selected => Page 4 .

Equipment

Engine code	ARC	AVY
System designation	SIMOS 3	SIMOS 3
Exhaust emissions fulfil	D3 standard	EU4 standard
EPC system	Yes	Yes
Self-diagnosis	Yes	Yes
Final control diagnosis	Yes	Yes
Data transfer operating mode to V.A.G 1551/1552	Rapid data transfer	Rapid data transfer
Control unit coding	V.A.G 1551/1552 or VAS 5051	V.A.G 1551/1552 or VAS 5051
Fault memory	Non-volatile memory1)	Non-volatile memory1)

satelettronica

Memory for learnt values	Non-volatile memory1)	Non-volatile memory1)
Lambda control	2 Probes	2 Probes
Knock control	1 Knock sensor	1 Knock sensor
Intake manifold change-over	No	No
Secondary air system	No	No
Exhaust gas recirculation	No	No
Camshaft adjustment	Yes	Yes

1) Independent of voltage supply.

Functions which can be selected when using the fault readers V.A.G 1551/1552 or VAS 5051

The prerequisites to select the desired functions can be found in the following table.

Function		Prerequisite		
Functions on V.A.G 1551/1552 or on VAS 5051		Engine stationary, ignition switched on	Engine running at idling speed	Vehicle being driven
01	Interrogate control unit version	yes	yes	yes
02	Interrogate fault memory	yes1)	yes	yes
03	Final control diagnosis	yes	no	no
04	Basic setting2)	yes	no	no
05	Erase fault memory	yes	yes	yes
06	End output	yes	yes	yes
07	Code control unit	yes	no	no
08	Read measured value block	yes	yes	yes
10	Adapting	yes	no	no
11	Login procedure	yes	no	no

1) Only carry out with ignition switched on, when engine does not start (operate starter for at least 5 seconds first).

2) Must be carried out after the following: Replacing engine control unit, throttle valve control part or engine.

1.4 - Significance of EPC warning lamp (fault lamp for electronic accelerator) in dash panel insert

"EPC" is the abbreviation for Electronic Power Control.

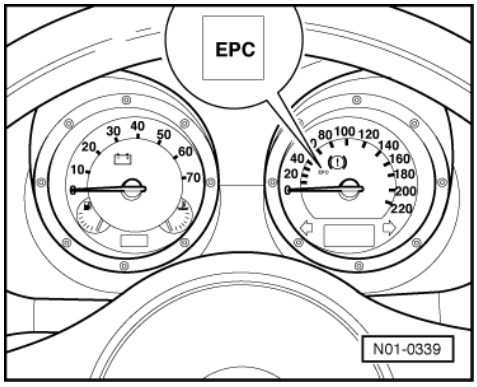

Protected by copyright. Copyright by Volkswagen AG.
Copyright by Volkswagen AG. Volkswagen AG does not guarantee or accept any liability with respect to the correctness of information in this document. Copying for private or commercial purposes, in part or in whole, is not permitted unless authorised by Volkswagen AG.
satelettronica

-> Fitting location of EPC warning lamp

When the ignition is switched on the engine control unit checks all components which are important for the correct functioning of the electronic power control.

If no faults are detected in the electronic accelerator (EPC system), the engine control unit switches the EPC warning lamp off after the engine has started.

If faults are detected in electronic accelerator system when the engine is running, the engine control unit will switch on the EPC lamp (these faults are marked in the fault table). Simultaneously an entry is made in the engine control unit fault memory.

Functional check:

- Switch on ignition:
  the EPC warning lamp must light-up.

If the EPC warning lamp does not light-up with ignition switched on:

- Check combi-instrument and EPC warning lamp as follows:

=> Electrical system self-diagnosis; Repair group 01

If the EPC warning lamp lights-up with ignition switched on, continue check as follows:

- Start engine and run at idling speed:
  The EPC warning lamp must go out after one second.

If the EPC warning lamp does not go out:

- Interrogate fault memory, if necessary, repair any faults and then erase fault memory => Page 8 , interrogating and erasing fault memory.

1.5 - Significance of exhaust emissions warning lamp

Engine code: AVY

If the engine control unit detects a fault this is indicated by switching the exhaust emissions warning lamp on.

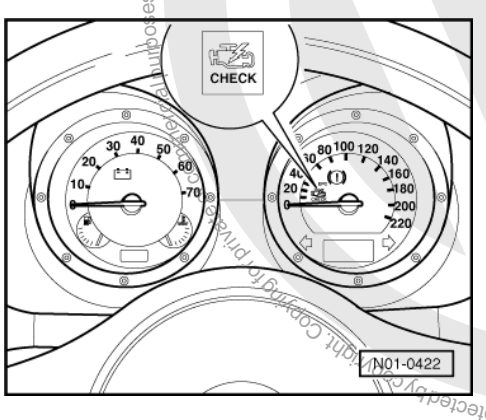

-> Location of exhaust emissions warning lamp

Protected by all rights. Copyright by Volkswagen AG. Volkswagen AG does not guarantee or accept any liability with respect to the correctness of information in this document. Copyright by Volkswagen AG. Any utilisation, in whole or in part, is not permitted unless authorised by Volkswagen AG.
satelettronica

Note:

The exhaust emissions warning lamp can switch on in the continuous or flashing mode. Always interrogate fault memory => Page 8 .

- Flashing mode: There is a fault present which can damage the catalyst when continuing to drive at this power output. If this occurs, continue driving only at reduced output.
- Continuous mode: There is a fault present which causes the emissions to deteriorate. Interrogate engine or gearbox control unit in this case.
- Interrogate the fault memory if the customer has a complaint or there is a driving characteristic problem and the exhaust gas warning lamp does not light up, this is because faults can be stored which will not switch the exhaust gas warning lamp on immediately.

Functional check:

- Switch on ignition:
  the exhaust emissions warning lamp must light-up.

If the exhaust emissions warning lamp does not light-up with ignition switched on:

- Check combi-instrument and exhaust emissions warning lamp as follows:

=> Electrical system self-diagnosis; Repair group 01

If the exhaust emissions warning lamp lights-up with ignition switched on, continue check as follows:

- Start engine and run at idling speed:
  The exhaust emissions warning lamp must go out after a few seconds.

If the exhaust emissions warning lamp does not go out:

- Interrogate fault memory, if necessary, repair any faults and then erase fault memory => Page 8 , interrogating and erasing fault memory.

1.6 - Connecting fault reader

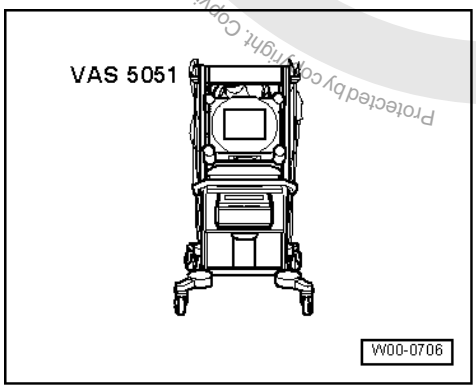

All functions which could previously be performed with V.A.G 1551/1552 can also be performed with the new tester VAS 5051 in the operating mode vehicle self-diagnosis.

=> Operating instructions for Vehicle Diagnosis, Testing and Information System VAS 5051.

Special tools, workshop equipment, testers, measuring instruments and auxiliary items required

- -> VAS 5051 Vehicle Diagnosis, Testing and Information System
- Diagnosis cable VAS 5051/1 or VAS 5051/3

Protected by copyright. Copying for private or commercial purposes, in part or in whole, is not permitted unless authorised by Volkswagen AG. Volkswagen AG does not guarantee or accept any liability with respect to the correctness of information in this document. Copyright by Volkswagen AG.
satelettronica

Test conditions:

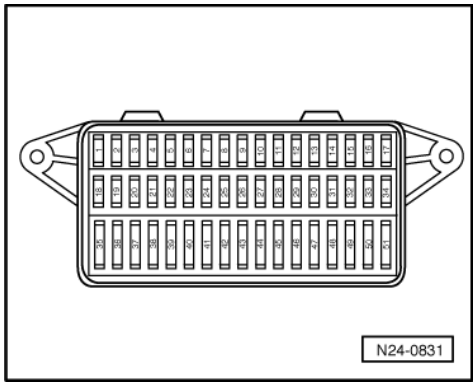

- -> Fuses No. 1, 3, 11, 15, 23, 30, 31, 32, 34, 36, 37, 39 and 40 must be OK.
- The battery voltage must be at least 11.5 V.
- Earth connection between engine (at bell housing) and body (under battery) OK.
- Earth connection in plenum chamber OK.

Connecting VAS 5051

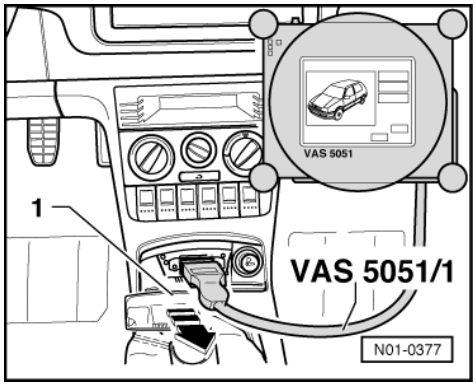

- -> Remove ash tray -1-.
- Fit connector from diagnosis cable VAS 5051/1 or VAS 5051/3 to diagnosis connection.
- Depending upon desired function:
  Switch ignition on
  or
  Start engine => Page 2 Table "Selectable functions".

Selecting operating mode:

- Press button on display for "Vehicle self-diagnosis".

Selecting vehicle system:

- Press button "01 - Engine electronics" on display.

The control unit identification and coding are indicated on the display.

If the coding differs from the vehicle version:

- Check control unit coding and, if necessary, code engine control unit => Page 127

Selecting diagnosis function:

All diagnostic functions available are indicated on the display.

- Press button on display for desired function.

Protected by copyright. Copying for private or commercial purposes, part or in whole, is not permitted unless authorised by Volkswagen AG. Volkswagen AG does not guarantee or accept any liability with respect to the correctness of information in this document. Copyright by Volkswagen AG.

satelettronica

Notes:

The display zones in functions 04 - Basic setting or 08 - Read measured value block are shown from top to bottom.

The following test sequences are for fault reader V.A.G 1551.

Connecting V.A.G 1551

Special tools, workshop equipment, testers, measuring instruments and auxiliary items required

- V.A.G 1551 Fault reader
- V.A.G 1551/3 Cable

Note:

The vehicle system tester V.A.G 1552 can be used instead of the fault reader V.A.G 1551, however a print-out is not possible.

Work sequence

- Connect fault reader V.A.G 1551 using cable V.A.G 1551/3.
- Depending upon desired function:
  Switch ignition on
  or
  Start engine => Page 2 , Table "Selectable functions".

Notes:

- If the display remains blank, check voltage supply for diagnostic connection according to fault finding programme:

=> Current flow diagrams, Electrical fault finding and Fitting locations

- If the display does not indicate as described in the work sequence:

=> Fault reader operating instructions

- If due to an input fault "Fault in the data transfer!" is displayed, pull wire off fault reader, reconnect and repeat work step.

-> Indicated on display:

```
V.A.G - SELF DIAGNOSIS      HELP
     1 - Rapid data transfer*
     2 - Flash code output*
```

* Appears alternately

- Operate fault reader taking into account the information on the display:

- Press key 1 for "Rapid data transfer".
- Press keys 0 and 1 for address word "Engine electronics" and confirm entry with Q key.

-> On the display the control unit identification and coding are displayed, e.g.:

```
036906033A 1.6l/4V SIMOS3 00HS3148
Coding 00031      WSC XXXXX
```

- 036 906 033A = Part No. of the control unit (for up-to-date control unit versions see parts catalogue)
- 1.6 ltr. = Engine displacement
- 4V = 4 valves
- SIMOS 3 = System designation
- 00 = No. of changed adaption channels
- HS = Manual gearbox (hand change)
- 3148 = Programme level number
- Coding 00031 = Control unit coding, coding variants of engine control unit => Page 128 .

satelettronica

- WSC xxxxx = Workshop code from V.A.G 1551, of the workshop which carried out the last coding. (If the factory coding has not been changed, WSC 00000 appears)

Note:

Replace control unit if the control version displayed does not correspond to the vehicle

=> Page 126 .

An incorrectly coded engine control unit leads to:

- Engine running faults (gear change jerks, load change jerks, etc.)
- Increased fuel consumption
- Increased exhaust gas emissions
- Faults stored in fault memory which are not actually present
- Functions will not be performed (Lambda regulation, activation of the activated charcoal filter system, etc.).
- Reduced gearbox life

If the coding differs from the vehicle version, then:

- Checking control unit coding => Page 127 , coding engine control unit
- Press ⇒key.

-> Indicated on display:

```
Rapid data transfer      HELP
Select function XXX
```

- Further measures see repair procedures.

2 - Fault memory

2.1 - Fault memory

Interrogate and erase engine control unit fault memory=> Page 8 .

2.2 - Automatic test sequence for interrogating all fault memories

Special tools, workshop equipment, testers, measuring instruments and auxiliary items required

- Fault reader V.A.G 1551 (or vehicle system tester V.A.G 1552) with cable V.A.G 1551/3

Work sequence

Note:

All functions which could previously be performed with V.A.G 1551/1552 can also be performed with the new tester VAS 5051.

The various control units/components are connected together via a data bus. This is why it is always sensible to interrogate the fault memory of all control units first with the "automatic test sequence".

During test and assembly work faults can be recognised from other control units like e.g. plug disconnected. Therefore on completion the fault memories of all control units must be interrogated and erased. To do this:

- Press key 0 twice for address word "Automatic test sequence" and confirm entry with Q key. The V.A.G 1551 transmits all known address words one after the other.

Protected by copyright. Copyright by Volkswagen AG. Volkswagen AG does not guarantee or accept any liability with respect to the correctness of information in this document. Copyright by Volkswagen AG. Commercial purposes, in part or in whole, is not permitted unless authorised by Volkswagen AG.
satelettronica

When a control unit answers with its identification the number of stored faults appears on the display or "No fault recognised".

Any system faults that are stored will be displayed one after the other and printed out. The V.A.G 1551 will then transmit the next address word.

-> The automatic test sequence has ended when following is indicated on display:

```
V.A.G SELF-DIAGNOSIS     HELP
1 - Rapid data transfer*
2 - Flash code output*
```

- Erase all fault memories and then carry out a road test.

Observe the valid safety measures during a test drive => Page 32 .

During the road test the following operating conditions must be fulfilled:
- The coolant temperature must exceed 80 °C .

- When the temperature is reached, the operating conditions
  Idling
  Part throttle
  Enrichment
  Full throttle
  Overrun
  must be attained several times.
- At full throttle the speed must exceed 3500 rpm.

Again interrogate the fault memories of all control units using the "automatic test sequence".

If no fault is stored:

- Press the ⇒key.

-> Indicated on display:

```
Rapid data transfer      HELP
Select function XX
```

- Press keys 0 and 6 for the function "End output" and confirm entry with the Q key.
- Switch off ignition.

2.3 - Interrogating and erasing engine control unit fault memory

Special tools, workshop equipment, testers, measuring instruments and auxiliary items required

◆ Fault reader V.A.G 1551 (or vehicle system tester V.A.G 1552) with cable V.A.G 1551/3

Work sequence

Note:

All functions which could previously be performed with V.A.G 1551/1552 can also be performed with the new tester VAS 5051.

- Connect fault reader V.A.G 1551 (V.A.G 1552). Start engine and select "Address word" 01 of engine control unit. When doing this the engine must be running at idling speed.
  (Connecting fault reader and selecting engine control unit => Page 4 .)

Only when engine does not start:

- Operate the starter for at least 5 seconds. Then do not switch the ignition off.

- Switch on fault reader printer with the print key. The warning lamp in key must light up.

Protected by copyright. Copying for private or commercial purposes, in part or in whole, is not permitted unless authorised by Volkswagen AG. Volkswagen AG does not guarantee or accept any liability with respect to the correctness of information in this document. Copyright by Volkswagen AG.
satelettronica

-> Indicated on display:

```
Rapid data transfer      HELP
Select function XX
```

- Operate fault reader taking into account the information on the display:
- Press keys 0 and 2 for function "Interrogate fault memory" and confirm entry with Q key.

-> The number of faults stored or "No fault recognised!" will be shown on the display.

```
X Faults recognised!
```

If no fault is stored:

- Press ⇒key.

If one or more faults are stored:

The stored faults will be displayed and printed out one after the other.

-> After the stored faults have been printed out, the display will show:

```
Rapid data transfer      HELP
Select function XX
```

- Press keys 0 and 5 for the function "Erase fault memory" and confirm entry with Q key.

-> Indicated on display:

```
Rapid data transfer
Fault memory is erased!
```

Note:

If the ignition is switched off between "Interrogate fault memory" and "Erase fault memory" the fault memory will not be erased.

- Press ⇒key.

-> Indicated on display:

```
Rapid data transfer      HELP
Select function XX
```

- Press keys 0 and 6 for the function "End output" and confirm entry with the Q key.
- Switch off ignition.
- Rectify faults printed out using fault table:
  SAE P0 codes=> Page 14
- Erase the learnt values and adapt the engine control unit again=> Page 128 .

3 - Fault table: SAE P0 codes

3.1 - Fault table: SAE P0 codes

Notes:

- The fault code overview is listed according to SAE or V.A.G code.
- Electronic accelerator "EPC" relevant faults are indicated additionally by the electronic accelerator warning lamp ("EPC warning lamp") in dash panel insert.
- Explanation of the fault types (e.g. "open circuit/short circuit to earth"):

=> Fault reader operating instructions

- If components are indicated as faulty:

Protected by copyright. Copying for private or commercial purposes, in part or in whole, is not permitted unless authorised by Volkswagen AG. Volkswagen AG does not guarantee or accept any liability with respect to the correctness of information in this document. Copyright by Volkswagen AG.

satelettronica

First check the wiring and connectors to these components as well as the system earth connections according to current flow diagram. This is particularly relevant if faults are output as "occurring sporadically" (SP).

- Erase fault memory after rectifying fault =>Page 8.

V.A.G 1551 print out, e.g.:

16497 P0113 035

Intake air temperature sender -G42

Signal too large

Sporadic fault

Explanation:

- 16497 = Fault code
- P0113 = Additional fault code (only for USA at present and disregard)
- 035 = Fault type as a number
- Intake air temperature sender -G42 = Faulty current path or incorrect location
- Signal too large = Fault type as text
- Sporadic faults = Faults that are not always present e.g. loose contact

Fault code		Fault text	Fault elimination
SAE	V.A.G		
P0106	16490	Intake manifold pressure/air pressure => - G71/-F96implausible signal	- Check intake manifold pressure sender =>Page 89
P0107	16491	Intake manifold pressure/air pressure => - G71/-F96signal too low	
P0108	16492	Intake manifold pressure/air pressure => - G71/-F96signal too high	
P0112	16496	Intake air temperature sender -G42 signal too low	- Check intake air temperature sender => Page 90
P0113	16497	Intake air temperature sender -G42 signal too high	
P0116	16500	Coolant temperature sender -G62 implausible signal	- Check coolant temperature sender => Page 94 - Check thermostat: => Repair group 19; Removing and installing parts of cooling system; Parts of cooling system, engine-side Parts of cooling system, engine-side
P0117	16501	Coolant temperature sender -G62 signal too low	
P0118	16502	Coolant temperature sender -G62 signal too high	

Fault code		Fault text	Fault elimination
SAE	V.A.G		
P0130	16514	Bank 1 probe 1 fault in electrical circuit	- Check Lambda probe heating before catalyst => Page 79 - Check Lambda probe and Lambda regulation before catalyst => Page 113
P0131	16515	Bank 1 probe 1 voltage too low	- Check Lambda probe and Lambda regulation before catalyst=> Page 113
P0132	16516	Bank 1 probe 1 voltage too high	
P0133	16517	Bank 1 probe 1 signal too slow	
P0134	16518	Bank 1 probe 1 no activity	

satelettronica

Fault code		Fault text	Fault elimination
P0135	16519	Bank 1 probe 1 heating current circuit electrical fault	

Fault code		Fault text	Fault elimination
SAE	V.A.G		
P0136	16520	Bank 1 probe 2 electrical fault in current circuit	- Check Lambda probe and Lambda control after catalyst => Page 118 - Check Lambda probe heating after catalyst => Page 82
P0137	16521	Bank 1 probe 2 voltage too low	
P0138	16522	Bank 1 probe 2 voltage too high	
P0139	16523	Bank 1 probe 2 signal too slow	
P0140	16524	Bank 1 probe 2 no activity	
P0141	16525	Bank 1 probe 2 heating current circuit electrical fault	

Fault code		Fault text	Fault elimination
SAE	V.A.G		
P0170	16554	Bank 1, fuel measuring system faulty	- Check fuel pressure regulator and holding pressure => Page 107
			- Check injectors =>Page 100
			- Check intake system for leaks => Page 111
			- Check fuel pump: => Repair group 20; Removing and installing parts of fuel system; Check fuel pump Check fuel pump
			- Check vacuum pipes for leaks

Fault code		Fault text	Fault elimination
SAE	V.A.G		
P0171	16555	Bank 1 fuel measuring system too lean	- Check fuel pressure regulator and holding pres. => Page 107
			- Check injectors =>Page 100
			- Check intake system for leaks => Page 111
			- Check Lambda probe and Lambda regulation before catalyst => Page 113
			- Check activated charcoal filter solenoid valve 1 => Page 22 , final control diagnosis
			- Check fuel pump: => Repair group 20; Removing and installing parts of fuel system; Check fuel pump Check fuel pump
			- Check exhaust system for leaks: => Repair group 26; Removing and installing parts of exhaust system
			- Check vacuum pipes for leaks

Fault code		Fault text	Fault elimination
SAE	V.A.G		

satelettronica

Fault code		Fault text	Fault elimination
P0172	16556	Bank 1, fuel measuring system, system too rich	- Check fuel pressure regulator and holding pressure => Page 107
			- Check injectors =>Page 100
			- Check Lambda probe and Lambda regulation before catalyst => Page 113
			- Check activated charcoal filter solenoid valve 1 => Page 22 , final control diagnosis

Fault code		Fault text	Fault elimination
SAE	V.A.G		
P0300	16684	Misfiring recognised	- Check injectors=>Page 100
P0301	16685	Cyl. 1 Misfiring recognised	- Check ignition cables and spark plugs => Page 145
P0302	16686	Cyl. 2 misfiring recognised	- Check ignition transformer => Page 151
P0303	16687	Cyl. 3 misfiring recognised	- Check misfiring detection => Page 158
P0304	16688	Cyl. 4 misfiring recognised	

Note:

For faults in the ignition outputs of the engine control unit, misfiring is always indicated in pairs:

Ignition output 1 = Misfire in cylinders 1 and 4

Ignition output 2 = Misfire in cylinders 2 and 3

Fault code		Fault text	Fault elimination
SAE	V.A.G		
P0321	16705	Engine speed sender -G28 implausible signal	- Check engine speed sender =>Page 98
P0322	16706	Engine speed sender -G28 no signal	
P0327	16711	Knock sensor 1 -G61 signal too low	- Check knock sensor => Page 155
P0328	16712	Knock sensor 1 -G61 signal too high	- Loosen knock sensor and retighten to 20 Nm
P0335	16719	Engine speed sender -G28 faulty	- Check engine speed sender =>Page 98
P0341	16725	Camshaft pos. sensor=>Sensor -G40 implausible signal	- Check Hall sender =>Page 150
P0342	16726	Camshaft pos. -sensor=>Sensor -G40, signal too low	
P0343	16727	Camshaft pos. -sensor=>Sensor -G40, signal too high	

Fault code		Fault text	Fault elimination
SAE	V.A.G		
P0420	16804	Bank1, Catalyst system, Efficiency too low1)	- Check Lambda probe and lambda regulation before catalyst => Page 113
			- Check Lambda probe and Lambda regulation after catalyst => Page 118

Protected by copyright. Copying for private or commercial purposes, in whole, is not permitted unless authorised by Volkswagen AG. Volkswagen AG does not guarantee or accept any liability with respect to the correctness of information in this document. Copyright by Volkswagen AG.
satelettronica

Fault code		Fault text	Fault elimination
			- Check intake system for leaks => Page 111
			- Check exhaust system for leaks: => Repair group 26; Removing and installing parts of exhaust system
			- Check catalyst: => Repair group 26; Removing and installing parts of exhaust system

1) Engine control unit switches on the exhaust emissions warning lamp in dash panel insert with this fault. Significance of exhaust emissions warning lamp => 3 .

Note:

If this fault is detected on its own, i.e. along with no Lambda probe or regulation fault, the catalyst must be checked for damage and if necessary, it must be replaced.

Fault code		Fault text	Fault elimination
SAE	V.A.G		
P0440	16824	Tank venting system, faulty	- Check activated charcoal filter solenoid valve 1=> Page 22 , Final control diagnosis
P0441	16825	Tank breathing system, flow rate faulty	- Check hoses and connecting pipes from fuel tank to throttle valve control part: => Repair group 20; Activated charcoal filter system; Servicing activated charcoal filter system Servicing activated charcoal filter system
P0442	16826	Tank venting system, small leak detected	- Check activated charcoal filter system: => Repair group 20; Activated charcoal filter system; Servicing activated charcoal filter system Servicing activated charcoal filter system
P0444	16828	Tank venting system -N80, open circuit	
P0445	16829	Tank venting system -N80, short circuit	
P0455	16839	Tank venting valve large leak detected	

Fault code		Fault text	Fault elimination
SAE	V.A.G		
P0461	16845	Fuel status signal, implausible signal	- Check signal from fuel gauge sender: => Current flow diagrams, Electrical fault finding and Fitting locations
P0501	16885	Vehicle speed signal implausible	- Check speed signal => Page 132
P0506	16890	Idling speed control, Revs below specification	- Check throttle valve control part => Page 85
P0507	16891	Idling speed regulation above specifications	
P0532	16916	A/C pressure sensor signal too low	- Check signal from high pressure sender G65 (air conditioning system) => Page 134
P0533	16917	A/C pressure sensor too high	

Fault code		Fault text	Fault elimination
SAE	V.A.G		
P0560	16944	Voltage supply signal implausible	- Check voltage supply for control unit=> Page 124
P0562	16946	Voltage supply too low	- Check alternator: => Current flow diagrams, Electrical fault finding and Fitting locations

satelettronica

P0563	16947	Voltage supply too high	
P0571	16955	Brake light switch -F1)2)implausible signal	- Check brake light switch and brake pedal switch => Page 140

1) If this fault occurs the engine control unit switches on the EPC warning lamp in dash panel insert. Significance of EPC warning lamp => 2 .

2) The system monitors both brake light switch -F and brake pedal switch -F47.

Fault code		Fault text	Fault elimination
SAE	V.A.G		
P0600	16984	Data bus drive message missing	- Check matching resistor of data bus => Page 143
P0601	16985	Control unit defective	- Replace engine control unit => Page 126
P0603	16987	Control unit defective	
P0604	16988	Control unit defective	
P0605	16989	Control unit defective	
P0606	16990	Control unit defective	
P0645	17029	Air conditioning input/output	- Check signals to and from air conditioning => Page 134

4 - Fault table: SAE P1 codes

4.1 - Fault table: SAE P1 codes

Notes:

- The fault code overview is listed according to SAE or V.A.G code.
- Erase fault memory after rectifying fault =>Page 8 .

Fault code		Fault text	Fault elimination
SAE	V.A.G		
P1102	17510	Bank 1, probe 1 heating element circuit, short to positive	- Check Lambda probe heating before catalyst => Page 79
P1103	17511	Bank1, probe 1 heating element circuit, performance too low	- Check Lambda probe and Lambda regulation before catalyst => Page 113
P1105	17513	Bank 1, probe 2 heating element circuit, short to positive	- Check Lambda probe heating after catalyst => Page 82
P1111	17519	Lambda control Bank 1 system too lean	- Check Lambda probe and Lambda control before catalyst => Page 113
P1112	17520	Lambda control Bank 1 system too rich	
P1113	17521	Bank 1, probe 1 internal resistance too high	- Check Lambda probe heating before catalyst => Page 79
P1114	17522	Bank 1, probe 2 internal resistance too high	- Check Lambda probe heating after catalyst => Page 82

Fault code		Fault text	Fault elimination
SAE	V.A.G		
P1115	17523	Bank 1, probe 1 heating element circuit short to earth	- Check Lambda probe heating before catalyst => Page 79

Protected by copyright. Copying for private or commercial purposes, in part or in whole, is not permitted unless authorised by Volkswagen AG. Volkswagen AG does not guarantee or accept any liability with respect to the correctness of information in this document. Copyright by Volkswagen AG.
satelettronica

P1116	17524	Bank 1, probe 1 heating element circuit open circuit	
P1117	17525	Bank 1, probe 2 heating element circuit, short to earth	- Check Lambda probe heating after catalyst => Page 82
P1118	17526	Bank1, probe 2 heating element open circuit	
P1127	17535	Bank 1, mixture adaption (mult.) system too rich	- Check fuel pressure regulator and holding pressure => Page 107
			- Check injectors =>Page 100
			- Check activated charcoal filter solenoid valve 1 => Page 22 , final control diagnosis

Fault code		Fault text	Fault elimination
SAE	V.A.G		
P1128	17536	Bank 1 mixture adaption (mult.) system too lean	- Check fuel pressure regulator and holding pressure => Page 107
			- Check injectors =>Page 100
			- Check intake system for leaks => Page 111
			- Check fuel pump: => Repair group 20; Removing and installing parts of fuel system; Checking fuel pump Checking fuel pump
			- Check exhaust system for leaks: => Repair group 26; Removing and installing parts of exhaust system
			- Check vacuum pipes for leaks

Fault code		Fault text	Fault elimination
SAE	V.A.G		
P1136	17544	Bank 1, mixture adaption (add.) system too lean	- Check fuel pressure regulator and holding pressure => Page 107
			- Check injectors =>Page 100
			- Check intake system for leaks => Page 111
			- Check fuel pump: => Repair group 20; Removing and installing parts of fuel system; Checking fuel pump Checking fuel pump
			- Check exhaust system for leaks: => Repair group 26; Removing and installing parts of exhaust system
			- Check vacuum pipes for leaks

Note:

add. = additive means, the fault only has an effect at idling speed.

Fault code		Fault text	Fault elimination
SAE	V.A.G		
P1137	17545	Bank 1, mixture adaption (add.) system too rich	- Check fuel pressure regulator and holding pressure => Page 107
			- Check injectors =>Page 100

Protected by copyright. Copying for private or commercial purposes, in part or in whole, is not permitted unless authorised by Volkswagen AG. Volkswagen AG does not guarantee or accept any liability with respect to the correctness and completeness of this document.
Copyright by Volkswagen AG.
satelettronica

			- Check activated charcoal filter solenoid valve 1 => Page 22 , final control diagnosis
P1141	17549	Load determination, implausible value	- Check throttle valve control part => Page 85
P1142	17550	Load determination, level not reached	- Check accelerator pedal position sender: => Repair group 20; Electronic power control (EPC); Checking accelerator pedal position sender Checking accelerator pedal position sender
P1143	17551	Load determination, level exceeded	- Check intake system for leaks => Page 111

Note:

add. = additive means, the fault only has an effect at idling speed.

Fault code		Fault text	Fault elimination
SAE	V.A.G		
P1149	17557	Lambda control bank 1 implausible control value	- Check Lambda probe and Lambda control before catalyst => Page 113
P1155	17563	Intake manifold pressure sender -G71short to positive	- Check intake manifold pressure sender =>Page 89
P1156	17564	Intake manifold pressure sender -G71 open circuit/short to earth	
P1157	17565	Intake manifold pressure sender -G71 voltage supply	
P1158	17566	Intake manifold pressure sender-G71 implausible signal	
P1171	17579	Angle sens. 2 for throt.valve drive -G188, implausible signal 1)	- Check throttle valve control part => Page 85
P1172	17580	Angle sens. 2 for throt.valve drive -G188, Signal too low 1)	
P1173	17581	Angle sens. 2 for throt.valve drive -G188, Signal too high 1)	

1) If this fault occurs the engine control unit switches on the EPC warning lamp in dash panel insert. Significance of EPC warning lamp => 2 .

Fault code		Fault text	Fault elimination
SAE	V.A.G		
P1176	17584	Bank 1, Lambda correction after cat. Control limit reached	- Check fuel pressure regulator and holding pressure => Page 107
			- Check injectors =>Page 100
			- Check intake system for leaks => Page 111
			- Check Lambda probe and Lambda regulation after catalyst => Page 118
			- Check Lambda probe and Lambda regulation before catalyst => Page 113
			- Check activated charcoal filter solenoid valve 1 => Page 22 , final control diagnosis

Copyright by Volkswagen AG. Volkswagen AG does not guarantee or accept any liability with respect to the correctness of information in this document. Copyright by Volkswagen AG. Protected by copyright. Copying for private or commercial purposes, in part or in whole, is not permitted unless authorised by Volkswagen AG.
satelettronica

Fault code		Fault text	Fault elimination
			- Check fuel pump: => Repair group 20; Removing and installing parts of fuel system; Checking fuel pump Checking fuel pump

Fault code		Fault text	Fault elimination
SAE	V.A.G		
P1196	17604	Bank 1, probe 1 heating element circuit electrical fault	- Check Lambda probe heating before catalyst => Page 79
P1198	17606	Bank 1, probe 2 heating current circuit electrical fault	- Check Lambda probe heating after catalyst => Page 82
P1213	17621	Injector Cyl. 1 -N30 short to positive	- Check injectors =>Page 100
P1214	17622	Injector Cyl. 2 -N31 short to positive	
P1215	17623	Injector Cyl. 3 -N32 short to positive	
P1216	17624	Injector Cyl. 4 -N33 short to positive	
P1225	17633	Injector Cyl. 1 -N30 short to earth	
P1226	17634	Injector Cyl. 2 -N31 short to earth	
P1227	17635	Injector Cyl. 3 -N32 short to earth	
P1228	17636	Injector Cyl. 4 -N33 short to earth	
P1237	17645	Injector Cyl. 1 -N30 open circuit	
P1238	17646	Injector Cyl. 2 -N31 open circuit	
P1239	17647	Injector Cyl. 3 -N32 open circuit	
P1240	17648	Injector Cyl. 4 -N33 open circuit	

Fault code		Fault text	Fault elimination
SAE	V.A.G		
P1250	17658	Fuel level too low	- Fill fuel tank
P1325	17733	Cylinder 1 knock control, control limit reached	- Fill fuel tank with at least 95 RON
P1326	17734	Cylinder 2 knock control, control limit reached	- Check knock sensor => Page 155
P1327	17735	Cylinder 3 knock control, control limit reached	- Loosen knock sensor and tighten again to 20 Nm
P1328	17736	Cylinder 4 knock control, control limit reached	- Eliminate cause for abnormal engine running noises

Fault code		Fault text	Fault elimination
SAE	V.A.G		
P1336	17744	Engine torque control adaption at limit	- Check throttle valve control part => Page 85 - Check intake air temperature sender => Page 90 - Check coolant temperature sender => Page 94 - Check accelerator pedal position sender: => Repair group 20; Electronic power control (EPC); Checking accelerator pedal position sender Checking accelerator pedal position sender

1) If this fault occurs the engine control unit switches on the EPC warning lamp in dash panel insert. Significance of EPC warning lamp => 2 .

Protected by copyright. Copyright by Volkswagen AG. Volkswagen AG does not guarantee or accept any liability with respect to the correctness of information in this document. Copyright by Volkswagen AG.
satelettronica

Fault code		Fault text	Fault elimination
SAE	V.A.G		
P1337	17745	Bank 1, camshaft position sensor => -G40 Short to earth	- Check Hall sender => Page 150
P1338	17746	Bank 1, camshaft position sensor => -G40 Open circuit / short to positive	
P1340	17748	Camshaft position/crankshaft position sensor Wrong allocation	- Check engine speed sender =>Page 98 - Check Hall sender => Page 150 - Check valve timing: => Repair group 15; Removing and installing cylinder head
P1351	17759	Bank 1, camshaft position sensor => -G40 Implausible signal when starting	- Check Hall sender => Page 150 - Erase fault memory => Page 8 , Interrogating and erasing fault memory

Fault code		Fault text	Fault elimination
SAE	V.A.G		
P1356	17764	Ignition circuit cylinder 1, short to positive 1)	- Check ignition cables/HT leads and spark plugs => Page 146 - Check ignition transformer => Page 151 - Check misfiring recognition => Page 158
P1357	17765	Ignition circuit cylinder 1, short to earth 1)	
P1359	17767	Ignition circuit cylinder 2, short to positive 2)	
P1360	17768	Ignition circuit cylinder 2 short to earth 2)	
P1386	17794	Control unit defective	- Renew engine control unit => Page 126
P1388	17796	Control unit defective3)	

1) The ignition circuit cylinder 1 produces the high tension voltage for cylinders 1 and 4 because a double ignition coil with voltage distribution is installed. Both are always ignited at the same time. One cylinder is just before TDC on the compression stroke and the other cylinder is on the exhaust stroke.

2) The ignition circuit cylinder 2 produces the high tension voltage for cylinders 2 and 3 because a double ignition coil with voltage distribution is installed. Both are always ignited at the same time. One cylinder is just before TDC on the compression stroke and the other cylinder is on the exhaust stroke.

3) If this fault occurs the engine control unit switches on the EPC warning lamp in the dash panel insert. Significance of EPC warning lamp => 2 .

Fault code		Fault text	Fault elimination
SAE	V.A.G		
P1397	17805	Sender wheel for engine speed, adaption limit reached	- Check engine speed sender =>Page 98 - Remove engine speed sender and check sender wheel is not damaged and is seated securely.
P1398	17806	Engine speed signal, TD short to earth	- Check speed signal => Page 134
P1399	17807	Engine speed signal (for rev. counter), short to positive	
P1409	17817	Tank venting valve -N80 fault in electrical current circuit	- Check activated charcoal filter solenoid valve 1=> Page 22 , Final control diagnosis
P1410	17818	Tank breathing valve -N80 short to positive	

Copyright by Volkswagen AG. Volkswagen AG does not guarantee or accept any liability with respect to the correctness of information in this document. Copying for private or commercial purposes, in part or in whole, is not permitted unless authorised by Volkswagen AG.
satelettronica

Fault code		Fault text	Fault elimination
P1425	17833	Tank breathing valve -N80 short to earth	
P1426	17834	Tank breathing valve -N80 open circuit	

Fault code		Fault text	Fault elimination
SAE	V.A.G		
P1500	17908	Fuel pump relay -J17 fault in electrical circuit	- Check fuel pump relay =>Page 22 , Final control diagnosis
P1501	17909	Fuel pump relay -J17, Short to earth	
P1502	17910	Fuel pump relay -J17, short to positive	
P1503	17911	Load signal alternator terminal DF Implausible signal	- Check wiring to alternator: => Current flow diagrams, Electrical fault finding and Fitting locations
P1507	17915	Idling speed system learnt value, lower level reached	- Perform idling speed check => Page 112
P1508	17916	Idling speed system learnt value, upper level reached	

Fault code		Fault text	Fault elimination
SAE	V.A.G		
P1519	17927	Bank 1, variable valve timing faulty	- Check camshaft adjustment: => Repair group 15; Servicing valve gear; Checking camshaft adjustment
P1525	17933	Bank 1, variable valve timing => -N205 Fault in electrical circuit	
P1526	17934	Bank 1, variable valve timing => -N205 Short to positive	
P1527	17935	Bank 1, variable valve timing => -N205 Short to earth	
P1528	17936	Bank 1, variable valve timing => -N205 Open circuit	

Fault code		Fault text	Fault elimination
SAE	V.A.G		
P1541	17949	Fuel pump relay -J17 open circuit	- Check fuel pump relay => Page 22 , Final control diagnosis
P1542	17950	Angle sender for throttle valve drive -G187 implausible signal1)	- Check throttle valve control part => Page 85
P1543	17951	Angle sender for throttle valve drive -G187 signal too low 1)	
P1544	17952	Angle sender for throttle valve drive -G187 signal too high 1)	
P1545	17953	Throttle valve control malfunction 1)	
P1558	17966	Throttle valve drive -G186, fault in electrical circuit 1)	
P1559	17967	Throttle valve control part -J338 Fault in basic setting 1)	- Erase learnt values and adapt engine control unit to the throttle valve control part => Page 128

1) If this fault occurs the engine control unit switches on the EPC warning lamp in dash panel insert. Significance of EPC warning lamp => 2 .

satelettronica

Fault code		Fault text	Fault elimination
SAE	V.A.G		
P1560	17968	Maximum engine revs surpassed	- Repair mechanical damage
P1564	17972	Throttle valve control part -J338 Low voltage in basic setting 1)	- Check battery, charge if needed - Erase learnt values and adapt engine control unit to throttle valve control part => Page 128
P1565	17973	Throttle valve control part -J338 Lower limit stop is not reached1)	- Erase learnt values and adapt engine control unit to throttle valve control part => Page 128
P1568	17976	Throttle valve control part -J338 mechanical fault1)	- Check throttle valve control part => Page 85

1) If this fault occurs the engine control unit switches on the EPC warning lamp in dash panel insert. Significance of EPC warning lamp => 2 .

Fault code		Fault text	Fault elimination
SAE	V.A.G		
P1570	17978	Engine control unit electronically locked	- Adapt engine control unit to electronic immobilizer => Page 130
P1579	17987	Throttle valve control part -J338 Adaption not started 1)	- Erase learnt values and adapt engine control unit to throttle valve control part => Page 128 - Check throttle valve control part => Page 85
P1600	18008	Voltage supply terminal 15 voltage too low	- Check control unit voltage supply => Page 124
P1602	18010	Voltage supply terminal 30 voltage too low	- Check alternator: => Current flow diagrams, Electrical fault finding and Fitting locations

1) If this fault occurs the engine control unit switches on the EPC warning lamp in dash panel insert. Significance of EPC warning lamp => 2 .

Fault code		Fault text	Fault elimination
SAE	V.A.G		
P1603	18011	Control unit defective1)	- Renew engine control unit => Page 126
P1604	18012	Control unit defective 1)	
P1612	18020	Exhaust control unit, Incorrect Coding	- Code engine control unit => Page 127
P1623	18031	Drive train data bus, No communication	- Check matching resistor of data bus => Page 143
P1625	18033	Drive train data bus, Implausible message from gearbox CU	- Check coding => Page 128 , Coding variants for engine control unit
P1626	18034	Drive train data bus, No message from gearbox CU	- Check matching resistor of data bus => Page 143

1) If this fault occurs the engine control unit switches on the EPC warning lamp in dash panel insert. Significance of EPC warning lamp => 2 .

Fault code		Fault text	Fault elimination
SAE	V.A.G		

satelettronica

Fault code		Fault text	Fault elimination
P1630	18038	Accelerator position sender -G79, Signal too low1)	- Check accelerator pedal: => Repair group 20; Electronic Engine Power Control (E-Gas); Check accelerator pedal position sender Check accelerator pedal position sender
P1631	18039	Accelerator position sender -G79, Signal too high 1)	
P1633	18041	Accelerator position sender 2 -G185, Signal too low 1)	
P1634	18042	Accelerator position sender 2 -G185, signal too high 1)	
P1636	18044	Drive train data bus, No message from airbag CU	- Check matching resistor of data bus => Page 143

1) If this fault occurs the engine control unit switches on the EPC warning lamp in dash panel insert. Significance of EPC warning lamp => 2 .

Fault code		Fault text	Fault elimination
SAE	V.A.G		
P1639	18047	Accelerator pedal position sender 1/2 -G79 +G185, Implausible signal1)	- Check accelerator position sender: => Repair group 20; Electronic Power Control (E-Gas); Check accelerator pedal position sender Check accelerator pedal position sender
P1640	18048	Control unit defective1)	- Replace engine control unit (J220) => Page 126
P1648	18056	Drive train data bus defective	- Check matching resistor of data bus => Page 143
P1649	18057	Drive train data bus, No messages from ABS CU	
P1650	18058	Drive train data bus, No messages from combi instrument	

1) If this fault occurs the engine control unit switches on the EPC warning lamp in dash panel insert. Significance of EPC warning lamp => 2 .

Fault code		Fault text	Fault elimination
SAE	V.A.G		
P1656	18064	Air conditioning input/output, short to earth	- Check signals to and from air conditioning system => Page 134
P1657	18065	Air conditioning input/output, short to positive	
P1676	18084	Electr.throttle control fault lamp -K132 Fault in electrical circuit1)	- Check fault lamp: => Repair group 20; Electronic power control (EPC); Checking electronic throttle control fault lamp Checking electronic throttle control fault lamp
P1677	18085	Electr.throttle control fault lamp - K132 Short to positive1)	
P1678	18086	Electr.throttle control fault lamp -K132 Short to earth1)	
P1679	18087	Electr.throttle control fault lamp -K132 Open circuit1)	
P1680	18088	Reset emergency running mode active	- Check throttle valve control part => Page 85

Published by Volkswagen AG. Volkswagen AG does not guarantee or accept any liability with respect to the correctness of information in this document. Copyright by Volkswagen AG. Copying for private or commercial purposes, in part or in whole, is not permitted unless authorised by Volkswagen AG.
satelettronica

Fault code		Fault text	Fault elimination
			- Check accelerator pedal position sender: => Repair group 20; Engine performance control (EPC); Check accelerator pedal position sender Check accelerator pedal position sender

1) If this fault occurs the engine control unit switches on the EPC warning lamp in dash panel insert. Significance of EPC warning lamp => 2 .

Fault code		Fault text	Fault elimination
SAE	V.A.G		
P1690	18098	Self-diagnosis fault lamp -K83 Current circuit electrical fault	- Check exhaust warning lamp => Page 3
P1691	18099	Self-diagnosis fault lamp -K83 Open circuit	
P1692	18100	Self-diagnosis fault lamp -K83 Short to earth	
P1693	18101	Self-diagnosis fault lamp -K83 current circuit electrical fault	
P1853	18261	Drive train data bus, implausible message from ABS CU	- Check matching resistor of data bus => Page 143

5 - Final control diagnosis

5.1 - Final control diagnosis

5.2 - Performing final control diagnosis

The final control diagnosis activates the following components in the stated sequence:

1. Fuel pump relay (J17)
2. Activated charcoal filter solenoid valve 1 (N80)
3. Secondary air inlet valve (N112) (display is of no consequence)
4. Secondary air pump relay (J299) (display is of no consequence)

Special tools, workshop equipment, testers, measuring instruments and auxiliary items required

- Diode test lamp V.A.G 1527
- Fault reader V.A.G 1551 (or vehicle system tester V.A.G 1552) with cable V.A.G 1551/3
- Adapter set V.A.G 1594
- Test box V.A.G 1598/31
- Current flow diagram

Check conditions

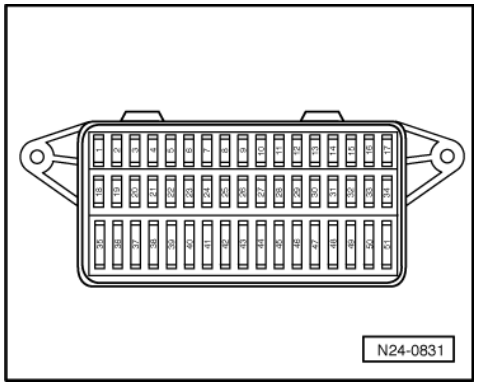

Protected by copyright. Copying for private or commercial purposes, in part or in whole, is not permitted unless authorised by Volkswagen AG. Volkswagen AG does not guarantee or accept any liability with respect to the correctness of information in this document. Copyright by Volkswagen AG.
satelettronica

- -> Fuses 30, 31 and 36 must be OK.
- The battery voltage must be at least 11.5 V.
- All electrical consumers, e.g. lights and rear window heating must be switched off.
- If the vehicle is equipped with an air conditioning system, this must be switched off.

Notes:

- All functions of V.A.G 1551/1552 can also be carried out with the new tester VAS 5051. Connecting VAS 5051 => Page 5 .
- The final control diagnosis can only be carried out if the engine is stationary and ignition switched on.
- The final control diagnosis will be broken off if the engine is started or a rotational impulse is recognised.
- During the final control diagnosis the individual final controls are activated 50 times unless the ⇒ key is pressed to switch manually to the next final control.
- The final control is checked acoustically or by touch.
- If it is necessary to repeat the final control diagnosis, without first running the engine briefly, switch the ignition off for approx. 2 seconds.
- The electric fuel pump will run during the complete final control diagnosis.

Work sequence

- Connect the fault reader V.A.G 1551 (V.A.G 1552). Then switch ignition on and select engine control unit with the "Address word" 01.
  (Connecting fault reader and selecting engine control unit => Page 4 .)

-> Indicated on display:

```
Rapid data transfer     HELP
Select function XX
```

- Operate fault reader taking into account the information on the display:
- Press keys 0 and 3 for the function "Final control diagnosis".

-> Indicated on display:

```
Rapid data transfer     Q
03 Final control diagnosis
```

Activating fuel pump relay (J17):

- Confirm input with Q key.

-> Indicated on display:

```
Final control diagnosis
Fuel pump relay-J17
```

The fuel pump relay (relay position 1 on relay plate) must click (max. 50 seconds) until the next control element is activated by pressing the ⇒key.

Note:

During the activation of the fuel pump relay the fuel pump must be heard to run at intervals.

If the relay does not click:

- Check fuel pump relay:

=> Current flow diagrams, Electrical fault finding and Fitting locations

Activating activated charcoal filter solenoid valve 1 (N80):

- Press ⇒key.

-> Indicated on display:

```
Final control diagnosis
Activ. charcoal filter solenoid valve
1     -N80
```

Protected by copyright. Copying for private or commercial purposes, in part or in whole, is not permitted unless authorised by Volkswagen AG. Volkswagen AG does not guarantee or accept any liability with respect to the correctness of information in this document. Copyright by Volkswagen AG.

satelettronica

The activated charcoal filter solenoid valve 1 must click (max. 50 seconds) until the next control element is activated by pressing ⇒key.

If the solenoid valve does not click:

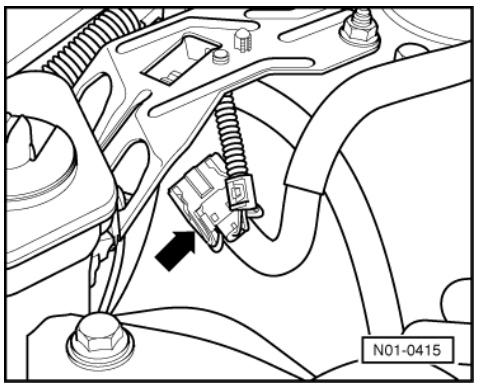

- -> Pull the 2 pin connector off solenoid valve 1 (N80) -arrow-.

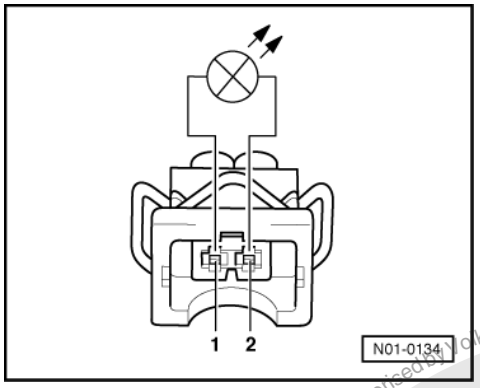

- -> Connect diode test lamp V.A.G 1527 using adapter cables from V.A.G 1594 to detached connector. The LED must flash

LED flashes:

- Proceed with final control diagnosis until completed.
- Switch off ignition.
- Renew activated charcoal filter solenoid valve 1 (N80):

=> Repair group 20; Activated charcoal filter system; Servicing parts of activated charcoal filter system Activated charcoal filter system Servicing parts of activated charcoal filter system

- Interrogate fault memory, if necessary, repair any faults and then erase fault memory => Page 8 , interrogating and erasing fault memory.

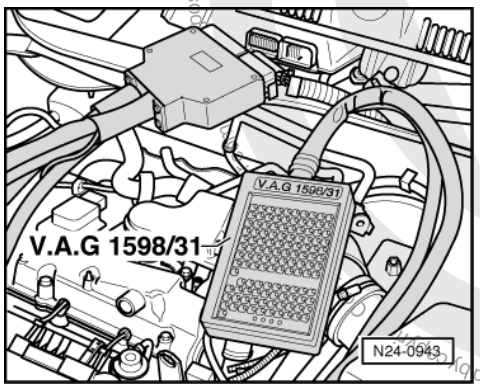

- Erase the learnt values and adapt the engine control unit again=> Page 128 .

satelettronica

LED does not flash:

- Proceed with final control diagnosis until completed.
- Switch off ignition.
- -> Connect test box V.A.G 1598/31 to control unit wiring harness. The engine control unit remains disconnected.

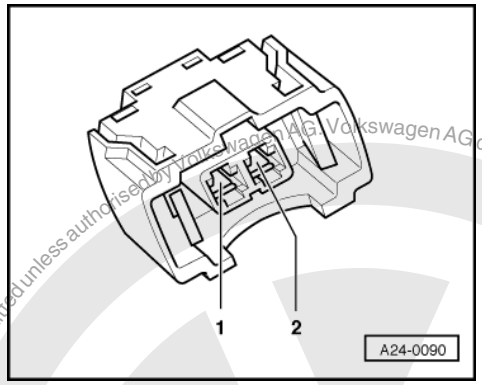

- -> Check wiring for open circuit between test box and 2-pin connector:
  Contact 2 and test box socket 61
  Wire resistance: Max. 1.5 ω
- Check wiring additionally for short to vehicle earth or battery positive.
  Specification: ∞ω

- Check wire between 2 pin connector contact 1 and fuel pump relay (J17) for open circuit using current flow diagram.
  Wire resistance: max. 1.5 ω

If no fault is detected in the wiring:

- Replace engine control unit
  => Page 126 .

Activating secondary air inlet valve (N112):

- Press ⇒key.

-> Indicated on display:

```
Final control diagnosis
Secondary air inlet valve -N112
```

Display is of no consequence.

Activating secondary air pump relay (J299):

- Press ⇒key.

-> Indicated on display:

```
Final control diagnosis
Secondary air pump relay -J299
```

Display is of no consequence.

- Press ⇒key.

-> Indicated on display:

```
Final control diagnosis
END
```

- Press ⇒key.

-> Indicated on display:

Protected by copyright. Copying for private or commercial purposes, in part or in whole, is not permitted unless authorised by Volkswagen AG. Volkswagen AG does not guarantee or accept any liability with respect to the correctness of information in this document. Copyright by Volkswagen AG.
satelettronica

```
Rapid data transfer     HELP
Select function XXX
```

- Press keys 0 and 6 for the function "End output" and confirm entry with the Q key.
- Switch off ignition.

6 - Readiness code

6.1 - Readiness code

Function

The readiness code is an 8-digit number code which displays the status of the emission relevant diagnosis.

When the diagnosis of a system (e.g. tank venting system) has been successfully completed, the corresponding position in the number code will change from 1 to 0.

The diagnosis is performed at regular intervals during normal driving. It is recommended that the readiness code be generated after performing repairs on an emission relevant system, to guarantee that these systems function correctly. If a fault is detected during the diagnosis it will be entered in the fault memory.

Each time the fault memory is erased or the voltage supply is interrupted the readiness code will be erased.

6.2 - Reading readiness code

Special tools, workshop equipment, testers, measuring instruments and auxiliary items required

- Fault reader V.A.G 1551 with cable V.A.G 1551/3

Work sequence

- Connect the fault reader V.A.G 1551. Then switch ignition on and select engine control unit with the "Address word" 01.
  (Connecting fault reader and selecting engine control unit => Page 4 .)

-> Indicated on display:

```
Rapid data transfer     HELP
Select function XXX
```

- Press keys 1 and 5 for the "Readiness code" function and confirm entry with Q key.

Must appear on display when all diagnosis functions have been successfully completed:

-> Indicated on display:

```
Readiness code
00000000 - Test complete
```

- Press ⇒key.
- Press keys 0 and 6 for the "End data transfer" function and confirm input with the Q key.

-> Indicated on display:

```
Readiness code
00101101 - Test not complete
```

One of the diagnostic checks has not run through successfully:

Protected by copyright. Copyright by Volkswagen AG. Copyright by Volkswagen AG. Volkswagen AG does not guarantee or accept any liability with respect to the correctness of information in this document. Copying for private or commercial purposes, in part or in whole, is not permitted unless authorised by Volkswagen AG.
satelettronica

- Press ⇒key.
- Generate readiness code => Page 27

Significance of figures in 8-digit number block for readiness code

The readiness code is generated only when all display zones show 0								
1	2	3	4	5	6	7	8	Diagnostic function
							0	Catalyst
						0		Catalyst heating (currently no diagnosis/always "0")
					0			Activated charcoal filter system (tank venting system)
				0				Secondary air system (not fitted/always "0")
			0					Air conditioner (currently no diagnosis/always "0")
		0						Lambda probes
	0							Lambda probe heating
0								Exhaust gas recirculation (not fitted/always "0")

6.3 - Generating readiness code

Special tools, workshop equipment, testers, measuring instruments and auxiliary items required

- Fault reader V.A.G 1551 (or vehicle system tester V.A.G 1552) with cable V.A.G 1551/3

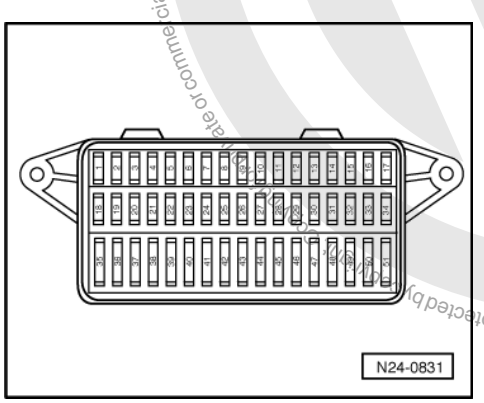

Test conditions

- -> All fuses must be OK.
- Vehicle stationary
- On vehicles with automatic gearbox selector lever in "P" or "N" position
- All electrical consumers, e.g. lights and rear window heating must be switched off.
- Intake air temperature less than 60°C
  =>display group 04, display zone 4
- Coolant temperature must be at least 80 °C, =>display group 04, display zone 3.

Work sequence

- Connect fault reader V.A.G 1551 (V.A.G 1552). Start engine and select "Address word" 01 of engine control unit. When doing this the engine must be running at idling speed.
  (Connecting fault reader and selecting engine control unit => Page 4 .)

Work step 1: Interrogate fault memory

-> Indicated on display:

Protected by copyright. Copy or distribute or commercial purposes, in part or in whole, is not permitted unless authorised by Volkswagen AG. Volkswagen AG does not guarantee or accept any liability with respect to the correctness of information in this document. Copyright by Volkswagen AG.
satelettronica

```
Rapid data transfer     HELP
Select function XXX
```

- Press keys 0 and 2 for function "Interrogate fault memory" and confirm entry with Q key.

-> The number of faults stored or "No fault recognised!" will be shown on the display.

```
X Faults recognised!
```

If a fault is stored:

- Rectify faults printed out using fault table:
  SAE P0 codes=> Page 14

If no fault is stored:

- Press ⇒key.

Work step 2: Erase fault memory

-> Indicated on display:

```
Rapid data transfer     HELP
Select function XXX
```

- Press keys 0 and 5 for the function "Erase fault memory" and confirm entry with Q key.

Note:

The readiness code is reset or erased each time fault memory is erased.

-> Indicated on display:

```
Rapid data transfer
Fault memory is erased!
```

Note:

If the ignition is switched off between "Interrogate fault memory" and "Erase fault memory" the fault memory will not be erased.

- Press ⇒key.

Note:

- During the work sequence the engine must not be switched off.

Work step 3: Matching the throttle valve control part to the engine control unit

-> Indicated on display:

```
Rapid data transfer     HELP
Select function XXX
```

- Press keys 0 and 4 for the function "Initiating basic settings" and confirm entry with Q key.

-> Indicated on display:

```
Basic setting
Input display group number XXX
```

- Press keys 0, 6 and 0 for the "Display group number 60" and confirm entry with Q key.

-> Indicated on display:
(1...4 = Display zones)

Protected by copyright. Copying for private or commercial purposes, in part or in whole, is not permitted unless authorised by Volkswagen AG. Volkswagen AG does not guarantee or accept any liability with respect to the correctness of information in this document. Copyright by Volkswagen AG.
satelettronica

```
System in basic setting      60
     xxx %     xxx %     x     ADP. runs
```

- Check specifications in display zones 3 and 4:
  Display zone 3: 0...8
  Display zone 4: ADP. runs, ADP. OK

-> Indicated on display:
(1...4 = Display zones)

```
System in basic setting 60
     xxx %     xxx %     9     ADP. OK
```

- Terminate engine basic setting at earliest after 30 seconds by pressing the⇒ key.

If the display does not indicate as described:

- Check throttle valve control part
  => Page 85 .

If the display indicates as described:

- Start engine and run at idling speed.

Work step 4: Activated charcoal filter system diagnosis (tank breathing system)

-> Indicated on display:

```
Rapid data transfer     HELP
Select function XXX
```

- Press keys 0 and 4 for the "Introduce basic setting" function and confirm entry with Q key.

-> Indicated on display:

```
Basic setting
Input display group number XXX
```

- Press keys 0, 7 and 0 for "Display group number 70" and confirm entry with Q key.

-> Indicated on display:
(1...4 = Display zones)

```
System in basic setting     70
    1     2     3     4
```

Note:

The engine must not be loaded during this diagnosis because the diagnosis will be interrupted and will not be started again until the engine is revved-up.

When the diagnosis is initiated by the engine control unit the display in display zone 4 jumps from "Test OFF" to "Test ON"

- Run engine at idling speed until the
  specification "TVV OK"
  is displayed in display zone 4.

If the display does not indicate as described:

- Interrogate fault memory => Page 8 .

If the display indicates as described:

- Press C key.

Protected by copyright. Copying for private or commercial purposes, in part or in whole, is not permitted unless authorised by Volkswagen AG. Volkswagen AG does not guarantee or accept any liability with respect to the correctness of information in this document. Copyright by Volkswagen AG.
satelettronica

Work step 5: Lambda probe ageing diagnosis for Lambda probe before catalyst

-> Indicated on display:

```
Basic setting
Input display group number XXX
```

- Press keys 0, 3 and 4 for "Display group number 34" and confirm entry with Q key.

-> Indicated on display:
(1...4 = Display zones)

```
System in basic setting      34
     1     2     3     4
```

- Depress brake pedal and hold it down.

  Engine runs at idling speed
  approx. 800...900 rpm.

- Run engine at idling speed until the display
  in display zone 4 jumps from "Test OFF" to "Test ON". The catalyst temperature in display zone 2 must be min. 340 °C.

Note:

This process can take a few minutes.

- Check the dynamic factor of Lambda probe before catalyst in display zone 3:
  Specification: 1.000... 4.000
- Continue to maintain idling speed until the specification "B1-P1 OK" appears in display zone 4.

If the display does not indicate as described:

- Interrogate fault memory => Page 8 .

If the display indicates as described:

- Press C key.

Work step 6: Lambda probe operating mode of diagnosis after catalyst

-> Indicated on display:

```
Basic setting
Input display group number XXX
```

- Press keys 0, 4 and 3 for "Display group number 43" and confirm entry with Q key.

-> Indicated on display:
(1...4 = Display zones)

```
System in basic setting      43
     1     2     3     4
```

- Depress brake pedal and hold it down.

  Engine runs at idling speed
  approx. 800...900 rpm.

- Run engine at idling speed until the display
  in display zone 4 jumps from "Test OFF" to "Test ON".

Protected by copyright. Copyright by Volkswagen AG. Volkswagen AG does not guarantee or accept any liability with respect to the correctness of information in this document. Copyright by Volkswagen AG. Reproduction, in whole, or in part, for commercial purposes, is prohibited unless authorised by Volkswagen AG.
satelettronica

Note:

This process can take a few minutes.

- Continue to maintain engine running at idling speed until the specification "B1-P2 OK" appears in display zone 4.

If the display does not indicate as described:

- Interrogate fault memory => Page 8 .

If the display indicates as described:

- Press C key.

Work step 7: Catalyst diagnosis

Note:

The diagnosis will only be terminated if the Lambda probe ageing diagnosis is first successfully completed.

-> Indicated on display:

```
Rapid data transfer     HELP
Select function XXX
```

- Press keys 0 and 4 for the function "Initiating basic settings" and confirm entry with Q key.

-> Indicated on display:

```
Basic setting
Input display group number XXX
```

- Press keys 0, 4 and 6 for "Display group number 46" and confirm entry with Q key.

-> Indicated on display:
(1...4 = Display zones)

```
System in basic setting     46
     1     2     3     4
```

- Depress brake pedal and hold it down.

  The engine speed is increased by the engine control unit to approx. 1100...1300 rpm.

- Maintain the engine at increased speed until the display in display zone 4 jumps from "Test OFF" to "Test ON". The catalyst temperature in display zone 2 must be min. 340 °C.
- Check efficiency of catalyst in display zone 3:
  Specification: min. 1.00 %
- Continue to maintain the speed until the specification "Cat B1 OK" appears in display zone 4.

If the display does not indicate as described:

- Interrogate fault memory => Page 8 .
- If no fault is stored in the fault memory:
- Switch off ignition.
- Perform a test drive at constant speed.
- Perform catalyst diagnosis again, if same result:
- Renew catalyst:
  =>Repair group 26; Removing and installing parts of the exhaust system

If the display indicates as described:

Protected by copyright. Copying for private or commercial purposes, in part or in whole, is not permitted unless authorised by Volkswagen AG. Volkswagen AG does not guarantee or accept any liability with respect to the correctness of information in this document. Copyright by Volkswagen AG.
satelettronica

- Press ⇒key.

  The engine speed decreases to idling speed.

- Read readiness code=> Page 26

7 - Measured value blocks

7.1 - Measured value blocks

7.2 - Safety precautions

Observe following if test and measuring instruments are required during a test drive:

- Test and measuring instruments must be secured to rear seat and operated by a 2nd person from this location.

  If test and measuring instruments are operated from front passenger's seat and the vehicle is involved in an accident, there is a possibility that the person sitting in this seat may receive serious injuries when the airbag is triggered.

7.3 - Read measured value block

The measured values in the functions read measured value block and basic setting are described during the individual component test. This table serves only as an overview.

Special tools, workshop equipment, testers, measuring instruments and auxiliary items required

- Fault reader V.A.G 1551 (or vehicle system tester V.A.G 1552) with cable V.A.G 1551/3

Test conditions

- All electrical consumers, e.g. lights and rear window heating must be switched off
- If the vehicle is equipped with an air conditioning system, this must be switched off.
- No faults must be stored in fault memory => Page 8 , interrogating and erasing fault memory.
- Coolant temperature must be at least 80 °C, =>display group 04, display zone 3.

Work sequence

- Connect fault reader V.A.G 1551 (V.A.G 1552). Start engine and select "Address word" 01 of engine control unit. When doing this the engine must be running at idling speed.
  (Connecting fault reader and selecting engine control unit => Page 4 .)

-> Indicated on display:

```
Rapid data transfer      HELP
Select function XXX
```

- Press keys 0 and 8 for the function "Read measured value block" and confirm entry with Q key.

-> Indicated on display:

```
Read measured value block
Input display group number XXX
```

- Select required display group number.

Protected by copyright. Copying for private or commercial purposes, in part or in whole, is not permitted unless authorised by Volkswagen AG. Volkswagen AG does not guarantee or accept any liability with respect to the correctness of information in this document. Copyright by Volkswagen AG.
satelettronica

Note:

The display group number 1 is an example, to illustrate the sequence.

- Press keys 0, 0 and 1 for "Display group number 1" and confirm entry with Q key.

-> Indicated on display:
(1...4 = Display zones)

```
Read measured value block 1
     1     2     3     4
```

Note:

To change to another display group proceed as follows:

Display group	V.A.G 1551	V.A.G 1552
Higher	Press key 3	Press ↑key
Lower	Press key 1	Press ↓key
Skip	Press key C	Press key C

- If the specifications in all display zones are obtained, press ⇒key.

-> Indicated on display:

```
Rapid data transfer      HELP
Select function XXX
```

- Press keys 0 and 6 for the "End output" function and confirm input with the Q key.
- Switch off ignition.

Note:

Measured value blocks which are not described in this chapter are currently only intended for the research and development and production. The values displayed are not relevant for service department fault finding.

8 - Evaluating measured value blocks, display groups 0...9 -Basic functions-

8.1 - Evaluating measured value blocks, display groups 0...9 -Basic functions-

Display group 1 -Basic functions-						
▪ Engine running at idling speed						
Read measured value block 1 ⇒				◂ Indicated on display		
xxxx rpm	xxx.x °C	xx.x %	xxxxxxxx			
1	2	3	4	◂ Display zones	Specification	Evaluation
				Adjustment conditions for basic setting	1x111111	=> Page 34
				Lambda regulator before catalyst	-15.0...15.0 %	=> Page 44
				Coolant temperature	80.0...110.0 °C	=> Page 36
				Engine speed (idling speed)	800...900 rpm	=> Page 33

Evaluating display group 1, display zone 1 - Engine speed (idling speed)

Appears on display	Possible fault cause	Fault elimination

Protected by copyright. Copyright by Volkswagen AG.
Copyright by Volkswagen AG. Volkswagen AG does not guarantee or accept any liability with respect to the correctness of information in this document.
Copyright by Volkswagen AG. Copy or part of it is not permitted unless authorized by Volkswagen AG for commercial purposes.
satelettronica

Less than specification	- Throttle valve control part sticking or defective	- Check throttle valve control part => Page 85 - Perform idling check => Page 112
More than specification	- Idling not recognised	- Interrogate fault memory, => Page 8 , Interrogating and erasing fault memory
	- Large amount of unmetered air (cannot be compensated for by the idling stabilisation)	- Check intake air system for leaks => Page 111
	- Throttle valve control part sticking/defective	- Check throttle valve control part => Page 85 - Perform idling check => Page 112

Significance of figures in 8-digit number block, display zone 4 - adjustment conditions

Significance when display = 1								
1	2	3	4	5	6	7	8	Significance
							1	Coolant temperature above 80 °C
						1		Speed below 2000 rpm
					1			Throttle valve closed
				1				Lambda regulation OK.
			1					Idling recognised
		1						Air conditioner compressor switched off
	1							Catalyst hot (over 300 °C)
1								No faults recognised by self-diagnosis

Display group 2 -Basic functions-

- Engine running at idling speed

Read measured value block 2 ⇒ ◂ Indicated on display

xxxx rpm	xxx.x %	x.x ms	xxx mbar	◂ Display zones	Specification	Evaluation
1	2	3	4			
				Intake manifold pressure	250...500 mbar	=> Page 34
			Injection period		1.0...3.0 ms	=> Page 34
		Engine load			12.0...30.0 %	=> Page 37
	Engine speed (idling speed)				800...900 rpm	=> Page 33

Evaluating display group 2, display zone 3 - Injection period

Appears on display	Possible fault cause	Fault elimination
Less than specification	- Large amount of fuel from the activated charcoal filter system	- Check activated charcoal filter solenoid valve 1 => Page 22 , Final control diagnosis
Larger than specification	- Increased engine load due to electrical consumers, air conditioner, gear selected or P.A.S. on full lock	- Eliminate increased load (air conditioner, power assisted steering etc.)

Evaluating display group 2, display zone 4 - Intake manifold pressure

Appears on display	Possible fault cause	Fault elimination

satelettronica

Less than specification	- Intake manifold pressure sender (G71) defective	- Check intake manifold pressure sender =>Page 89
Larger than specification	- Increased engine load due to electrical consumers, air conditioner, gear selected or P.A.S. on full lock	- Eliminate increased load (air conditioner, power assisted steering etc.)
	- Intake manifold pressure sender (G71) defective	- Check intake manifold pressure sender =>Page 89

Display group 3 -Basic functions-

▪ Engine running at idling speed

Read measured value block 3 ⇒ ◂ Indicated on display

xxxx rpm	xxx mbar	xx.x %	xx.x°BTDC	◂ Display zones	Specification	Evaluation
1	2	3	4			
				Ignition angle	-5.0...10.0 ° BTDC	---
				Throttle valve angle Throttle valve drive angle sender (G187)	0.8...4.5 %	=> Page 37
				Intake manifold pressure	250...500 mbar	=> Page 34
				Engine speed (idling speed)	800...900 rpm	=> Page 33

Display group 4 -Basic functions-

▪ Engine running at idling speed

Read measured value block 4 ⇒ ◂ Indicated on display

xxxx rpm	xx.x V	xxx.x °C	xxx.x °C	◂ Display zones	Specification	Evaluation
1	2	3	4			
				Intake air temperature	-48.0...142.5 °C	=> Page 36
				Coolant temperature	80.0...110.0 °C	=> Page 36
				Engine control unit voltage supply	11.5...15.0 V	=> Page 35
				Engine speed (idling speed)	800...900 rpm	=> Page 33

Note on display zone 3:

The engine control unit will use the intake air temperature as a replacement value for an engine start (start temperature - replacement value) as soon as there is a fault stored in the fault memory, which affects the coolant temperature sender (G62). The temperature then rises according to a model stored in the control unit. When the engine has reached normal working temperature a fixed replacement value will be displayed after a certain period. This fixed value is also dependent upon the intake air temperature (below or above 20 °C).

Note on display zone 4:

The total temperature range is given as the specification. The displayed value must be above ambient temperature.

Evaluating display group 4, display zone 2 - Control unit voltage supply

Appears on display	Possible fault cause	Fault elimination
Less than specification	- Alternator defective, battery heavily discharged	- Check alternator and battery voltage, charge battery: => Electrical system; Repair group 27
	- Battery heavily loaded shortly after starting due to high charging current and current consumers	- Increase revs slightly for a few minutes and switch off current consumers
	- Transfer resistance in the current supply or the engine control unit earth connection	- Check engine control unit voltage supply => Page 124

Copyright by Volkswagen AG. Volkswagen AG does not guarantee or accept any liability with respect to the correctness of information in this document. Copying for private or commercial purposes, in part or in whole, is not permitted unless authorised by Volkswagen AG.
satelettronica

	- Current draw when ignition is off	- Eliminate current draw
More than specification	- Voltage regulator on alternator defective	- Check voltage, replace regulator if necessary: => Electrical system; Repair group 27
	- Excess voltage due to jump starting or quick charging unit	- Interrogate fault memory => Page 8 , Interrogating and erasing fault memory

Evaluating display group 4, display zone 3 - Coolant temperature

Appears on display	Possible fault cause	Fault elimination
Less than specification	- Engine too cold	- If necessary carry out test drive
	- Coolant temperature sender or wiring to engine control unit	- Check coolant temperature sender =>Page 94
More than specification	- Radiator soiled	- Clean radiator
	- Radiator fan not functioning	- Check function => Current flow diagrams, Electrical fault finding and Fitting locations
	- Thermostat sticking/defective	- Check thermostat: => Repair group 19; Removing and installing parts of cooling system; Parts of cooling system, engine side Parts of cooling system, engine side
	- Coolant temperature sender or wiring to engine control unit	- Check coolant temperature sender =>Page 94
Constant 30.0 or 49.5 °C	- Wiring open/short circuit	- Check coolant temperature sender =>Page 94

Evaluating display group 4, display zone 4 - Intake air temperature

Appears on display	Possible fault cause	Fault elimination
Less than or greater than specification	- Intake air temperature sender (G42) defective	- Check intake air temperature sender =>Page 90
Constant 9.0 or 30.0 °C		

Display group 5 -Basic functions-						
▪ Engine running at idling speed						
Read measured value block 5 ⇒				◂ Indicated on display		
xxxx rpm	xxx.x %	xxx km/h	Text	◂ Display zones	Specification	Evaluation
1	2	3	4	Operating mode: Idling, part throttle, enrichment, overrun, full throttle	Idling	---
				Road speed	0 km/h	---
				Engine load	12.0...30.0 %	=> Page 37
				Engine speed (idling speed)	800...900 rpm	=> Page 33

Display group 6 -Basic function-		
▪ Engine running at idling speed		
Read measured value block 6	⇒	◂ Indicated on display

satelettronica

xxxx rpm	xxx.x %	xxx.x °C	xx.x %	◂ Display zones	Specification	Evaluation
1	2	3	4			
				Elevation correction factor	-50.0...20.0 %	---
				Intake air temperature	-48.0...142.5 °C	=> Page 36
				Engine load	12.0...30.0 %	=> Page 37
				Engine speed (idling speed)	800...900 rpm	=> Page 33

Note on display zone 3:

The total temperature range is given as the specification. The displayed value must be above ambient temperature.

9 - Evaluating measured value blocks, display groups 10...29 -Ignition-

9.1 - Evaluating measured value blocks, display groups 10...29 -Ignition-

Display group 10 -Ignition-						
▪ Engine running at idling speed						
Read measured value block 10			⇒	◂ Indicated on display		
xxxx rpm	xxx.x %	xxx.x %	xx.x°BTDC	◂ Display zones	Specification	Evaluation
1	2	3	4			
				Ignition angle	-5.0...10.0 ° BTDC	---
				Throttle valve angle Throttle valve drive angle sender 1 (G187)	0.8...4.5 %	=> Page 37
				Engine load	12.0...30.0 %	=> Page 37
				Engine speed (idling speed)	800...900 rpm	=> Page 33

Evaluating display group 10, display zone 2 - Engine load

Appears on display	Possible fault cause	Fault elimination
Less than specification	- Lesser values can only occur when driving in overrun	---
More than specification	- Poor idling speed (not running on all cylinders)	- Check injectors => Page 145
	- Throttle valve control part sticking/defective	- Check throttle valve control part => Page 85
	- Electric consumers switched on	- Switch off electric consumers
	- Steering wheel at full lock	- Turn steering wheel to centre position

Evaluating display group 10, display zone 3 - Throttle valve angle, throttle valve drive angle sender 1

Appears on display	Possible fault cause	Fault elimination
More than specification	- Engine control unit not matched to throttle valve control part	- Erase learnt values and adapt the engine control unit again => Page 128
	- Throttle valve drive angle sender 1 (G187) in throttle valve control part defective	- Check throttle valve control part => Page 85

satelettronica

	- Throttle valve sticking	- Eliminate cause

Display group 12 -Ignition- Position of camshaft in respect to crankshaft						
▪ Engine running at idling speed						
Read measured value block 12 ⇒				◂ Indicated on display		
xxxx rpm	xxx.x %	xx	xx	◂ Display zones	Specification	Evaluation
1	2	3	4	No. of crankshaft tooth when camshaft signal jumps from high to low	88...90	---
				No. of crankshaft tooth when camshaft signal jumps from low to high	26...29	---
		Engine load			12.0...30.0 %	=> Page 37
	Engine speed (idling speed)				800...900 rpm	=> Page 33

Display group 14 -Ignition- Misfire recognition						
▪ Whilst driving						
Read measured value block 14 ⇒				◂ Indicated on display		
xxxx rpm	xxx.x %	xxx	Text	◂ Display zones	Specification	Evaluation
1	2	3	4	Misfire recognition (activated, blocked)	activated	---
		Misfire total			0...20	=>Page 38
	Engine load				12.0...100.0 %	---
Engine speed					800..6500 rpm	---

Note on display zone 3:

The total number of misfires is displayed from the time the engine was started. The specification is only valid for max. 5 minutes after the engine has been started.

Evaluating display group 14, display zone 3 - Total number of misfires

Appears on display	Possible fault cause	Fault elimination
More than specification	- Spark plug defective - Spark plug connector defective - Ignition coil defective - Ignition coil output stage defective	- Check spark plugs and ignition/HT wiring with connector => Page 151
	- Injector defective	- Check injectors=> Page 100
	- Camshaft adjuster sticking/defective - Camshaft adjuster valve (N205) sticking/ defective	- Check camshaft adjustment: => Repair group 15; Servicing valve gear; Checking camshaft adjustment Checking camshaft adjustment
	- Timing incorrect	- Check timing: Measured value block 93 => Page 51 => Repair group 15; Removing and installing cylinder head

Display group 15 -Ignition- Misfire recognition Cyl. 1 to Cyl. 3				
▪ Whilst driving				
Read measured value block 15 ⇒				◂ Indicated on display
xxx	xxx	xxx	Text	

Printed by copyright by Volkswagen AG. Volkswagen AG does not guarantee or accept any liability with respect to the correctness of information. Copying for private or commercial purposes, in part or in whole, is not permitted unless authorised by Volkswagen AG.

satelettronica

1	2	3	4	◂ Display zones	Specification	Evaluation
				Misfire recognition (activated, blocked)	activated	---
			Misfire Cyl. 3		0...5	=> Page 39
		Misfire Cyl. 2			0...5	=> Page 39
	Misfire Cyl. 1				0...5	=> Page 39

Display group 16 -Ignition- misfire recognition Cyl. 4

▪ Whilst driving

Read measured value block 16 ⇒ ◂ Indicated on display

xxx	xxx	xxx	Text	◂ Display zones	Specification	Evaluation
1	2	3	4			
				Misfire recognition (activated, blocked)	activated	---
			Display not relevant		Not relevant	---
		Display not relevant			Not relevant	---
	Misfire Cyl. 4				0...5	=> Page 39

Evaluating display group 15 display zones 1 to 3 or display group 16 display zone 1 - Misfire recognition Cyl. 1 to Cyl. 4

Appears on display	Possible fault cause	Fault elimination
More than specification	- Spark plug defective - Spark plug connector defective - Ignition coil defective - Ignition coil output stage defective	- Check spark plugs and ignition/HT wiring with connector => Page 151
	- Injector defective	- Check injectors=> Page 100
	- Camshaft adjuster sticking/defective - Camshaft adjuster valve (N205) sticking/ defective	- Check camshaft adjustment: => Repair group 15; Servicing valve gear; Checking camshaft adjustment Checking camshaft adjustment
	- Timing incorrect	- Check timing: => Repair group 15; Removing and installing cylinder head

Display group 20 -Ignition- Knock control Cyl. 1 to Cyl. 4

▪ Whilst driving

Read measured value block 20 ⇒ ◂ Indicated on display

xx.x °B(A)TDC	xx.x °B(A)TDC	xx.x °B(A)TDC	xx.x °B(A)TDC	◂ Display zones	Specification	Evaluation
1	2	3	4			
				Cyl. 4 ignition retarded by knock regulation	0.0...12.0 °CA	=> Page 40
			Cyl. 3 ignition retarded by knock regulation		0.0...12.0 °CA	=> Page 40
		Cyl. 2 ignition retarded by knock regulation			0.0...12.0 °CA	=> Page 40

satelettronica
Protected by copyright. Copying for private or commercial purposes, in part or in whole, is not permitted unless authorised by Volkswagen AG. Copyright by Volkswagen AG. This document does not guarantee the correctness of the contents and does not accept any liability with respect to the correctness of the contents.

Cyl. 1 ignition retarded by knock regulation	0.0...12.0 °CA	=> Page 40

Note on display zones 1 to 4:

Display value should be 0.0 BTDC at idling speed.

Evaluating display group 20, display zones 1 to 4 - Cyl. 1 to Cyl. 4 ignition retardation

Appears on display	Possible fault cause	Fault elimination
All cylinders between: 8.0...12.0 °CA and values displayed are all the same	- Knock sensor defective - Connections corroded	- Check knock sensor => Page 155
	- Knock sensor incorrectly tightened	- Loosen knock sensor and tighten to 20 Nm
	- Ancillary components on engine loose	- Tighten ancillary components
	- Poor fuel quality	- Change type of fuel
One cylinder deviates greatly from the others	- Connector corroded	- Check knock sensor => Page 155
	- Engine damaged	- Check compression pressures: => Repair group 15; Removing and installing cylinder head; Checking compression pressure Checking compression pressure
	- Ancillary components on engine loose	- Tighten ancillary components

Display group 22 -Ignition- Knock control cylinders 1 and 2						
▪ Whilst driving Read measured value block 22 xxxx rpm xxx.x % xx.x °B(A)TDC xx.x °B(A)TDC				⇒ ◂ Indicated on display		
1	2	3	4	◂ Display zones	Specification	Evaluation
				Cyl. 2 ignition retarded by knock regulation	0.0...12.0 °CA	=> Page 41
			Cyl. 1 ignition retarded by knock regulation		0.0...12.0 °CA	=> Page 41
		Engine load			12.0...100.0 %	---
	Engine speed				800..6500 rpm	---

Note on display zones 3 and 4:

Display value should be 0.0 BTDC at idling speed.

Display group 16 -Ignition- Knock control cylinders 3 and 4						
▪ Whilst driving Read measured value block 23 xxxx rpm xxx.x % xx.x °B(A)TDC xx.x °B(A)TDC				⇒ ◂ Indicated on display		
1	2	3	4	◂ Display zones	Specification	Evaluation
				Cyl. 4 ignition retarded by knock regulation	0.0...12.0 °CA	=> Page 41

satelettronica

Display zone	Meaning	Specification	Evaluation
	Cyl. 3 ignition retardation by knock regulation	0.0...12.0 °CA	=> Page 41
	Engine load	12.0...100.0 %	---
	Engine speed	800..6500 rpm	---

Note on display zones 3 and 4:

Display value should be 0.0 BTDC at idling speed.

Evaluating display groups 22 and 23, display zones 3 and 4 - Retardation of ignition

Appears on display	Possible fault cause	Fault elimination
All cylinders between: 8.0...12.0 °CA and values displayed are all the same	- Knock sensor defective - Connections corroded	- Check knock sensor => Page 155
	- Knock sensor incorrectly tightened	- Loosen knock sensor and tighten to 20 Nm
	- Ancillary components on engine loose	- Tighten ancillary components
	- Poor fuel quality	- Change type of fuel
One cylinder deviates greatly from the others	- Connector corroded	- Check knock sensors => Page 155
	- Engine damaged	- Check compression pressures: => Repair group 15; Removing and installing cylinder head; Checking compression pressure Checking compression pressure
	- Ancillary components on engine loose	- Tighten ancillary components

Display group 28 -Ignition- knock control			
▪ Whilst driving			
Read measured value block 28 ⇒	◂ Indicated on display		
xxxx rpm · xxx.x % · xxx.x °C · Text			
1 · 2 · 3 · 4	◂ Display zones	Specification	Evaluation
4	Result of knock regulation diagnosis (Test ON / Test OFF / Sys. OK / Sys. n.OK.)	Sys. OK.	---
3	Coolant temperature	80.0...110.0 °C	=> Page 36
2	Engine load	40.0...100.0 %	---
1	Engine speed	2500...6500 rpm	---

10 - Evaluating measured value blocks, display groups 30...49 -Lambda regulation-

10.1 - Evaluating measured value blocks, display groups 30...49 -Lambda regulation-

Display group 30 -Lambda regulation-	
▪ Engine running at idling speed	
Read measured value block 30 ⇒	◂ Indicated on display

Protected by copyright. Copying for private or commercial purposes, in part or in whole, is not permitted unless authorised by Volkswagen AG. Volkswagen AG does not guarantee or accept any liability with respect to the correctness of information in this document. Copyright by Volkswagen AG.
satelettronica

xxx	xxx					
1	2	3	4	◂ Display zones	Specification	Evaluation
		Status of Lambda regulation after catalyst			111	=> Page 42
	Status of Lambda regulation before catalyst				111	=> Page 42

Note on display zone 2:

The 3rd digit of the 3 digit number block is set to 1 first in part load/throttle range.

Significance of figures in 3-digit number block, display zones 1 and 2 - status of Lambda regulation before and after catalyst

Significance if display = 1			
1	2	3	Significance
		1	Lambda regulation active
	1		Lambda probe operationally ready
1			Lambda probe heating on

Display group 31 -Lambda regulation- constantly operating Lambda probes						
▪ Engine running at idling speed						
Read measured value block 31				⇒ ◂ Indicated on display		
x.xxxx	x.xxxx					
1	2	3	4	◂ Display zones	Specification	Evaluation
		Lambda specification Bank 1			0.9900...1.0100	---
	Lambda actual Bank 1				0.9600...1.0400	---

Display group 32 -Lambda regulation- Lambda learnt values before catalyst						
▪ Engine running at idling speed						
Read measured value block 32				⇒ ◂ Indicated on display		
xx.x %	xx.x %					
1	2	3	4	◂ Display zones	Specification	Evaluation
		Lambda learnt value at part load (multiplicative) before catalyst			-10.0...10.0 %	=> Page 43
	Lambda learnt value at idling speed (additive) before catalyst				-10.0...10.0 %	=> Page 43

Notes on display zones 1 and 2:

Low values indicate that the engine is running too rich and therefore the Lambda regulation is leaning the mixture.

- High values indicate that the engine is running too lean and therefore the Lambda regulation enriches the mixture.
- add = additive - The effects of the fault (e.g. unmetered air) will reduce as the engine speed increases. The injection period will be modified by a fixed amount for additive learnt values. This amount is not dependent upon the basic injection period.

Protected by copyright. Copyright by Volkswagen AG. Volkswagen AG does not guarantee or accept any liability with respect to the correctness of information in this document. Copyright by Volkswagen AG. Commercial purposes in part or in whole is not permitted unless authorised by Volkswagen AG.
satelettronica

- mul = multiplicative - The effects of the fault (e.g. faulty injector) will increase as the engine speed increases. A multiplicative learnt value is a proportional change to the injection period. This change is dependent on the basic injection period.

Evaluating display group 32, display zones 1 and 2 - Lambda learnt values before catalyst

Appears on display	Possible fault cause	Fault elimination
Low Lambda learnt values	- Low learnt values at idling but with normal learnt values at part throttle: possible oil dilution (high level of fuel in oil)	- Disappears after motorway drive or oil change
	- Injector leaking	- Check injector =>Page 100
	- Activated charcoal filter solenoid valve 1 permanently open	- Check activated charcoal filter solenoid valve 1 => Page 22 - Final control diagnosis
	- Lambda probe heating defective or Lambda probe soiled	- Check Lambda probe heating =>Page 79

Appears on display	Possible fault cause	Fault elimination
High Lambda learnt values	- High learnt values at idling speed, not so high learnt values at part throttle: possible unmetered air in area of intake manifold	- Check intake air system for leaks =>Page 111
	- Injector blocked	- Check injectors =>Page 100
	- Fuel pressure too low	- Check fuel pressure regulator and holding pressure => Page 107
	- Lambda probe heating defective or Lambda probe soiled	- Check Lambda probe heating =>Page 79
	- Unmetered air at exhaust manifold gasket	- Check exhaust system for leaks: => Repair group 26; Removing and installing parts of exhaust system

Display group 33 -Lambda regulation- Lambda regulation values before catalyst						
▪ Engine running at idling speed Read measured value block 33 ⇒ ◂ Indicated on display xx.x % x.x V						
1	2	3	4	◂ Display zones	Specification	Evaluation
		Lambda probe voltage before catalyst			1.4...1.6 V	---
	Lambda regulation before catalyst				-15.0...15.0 %	=> Page 44

Notes on display zone 1:

- The display must fluctuate around 0.0 %. If constant 0.0 % is displayed, the Lambda regulation has switched from regulation to control, because there is a fault in the Lambda regulation. Interrogate fault memory => Page 8 , Interrogating and erasing fault memory.

Notes on display zone 2:

- The voltage signal "rich mixture (low level of residual oxygen)" is below 1.5 V.
- The voltage signal "lean mixture (high level of residual oxygen)" is above 1.5 V.

Protected by copyright. Copying for private or commercial purposes, in part or in whole, is not permitted unless authorised by Volkswagen AG. Volkswagen AG does not guarantee or accept any liability with respect to the correctness of information in this document. Copyright by Volkswagen AG.

satelettronica

Evaluating display group 33, display zone 1 - Lambda regulator before catalyst

Appears on display	Possible fault cause	Fault elimination
Outside tolerance range	- Minus range: Mixture too rich, Lambda control weakens mixture - Positive range: Mixture too lean, Lambda control enriches mixture	- Wait 30 seconds until the display has stabilised
	- Injector defective	- Check injectors=> Page 100
	- Lambda learnt value on limit	- Check Lambda learnt value in display group 32

Copyright by Volkswagen AG. Volkswagen AG does not guarantee or accept any liability with regard to the correctness of information in this document. Copyright by Volkswagen AG. Protected by copyright. Copying for private or commercial purposes, in part or in whole, is not permitted unless authorised by Volkswagen AG.

Display group 34 -Lambda regulation- Lambda probe diagnosis before catalyst (checking ageing via amplitude duration monitoring)

- Engine running at idling speed
- Control unit in mode 04-Basic setting
- Depress brake pedal

Read measured value block 34 ⇒ ◂ Indicated on display

xxxx rpm	xxx.x °C	x.xx	Text	◂ Display zones	Specification	Evaluation
1	2	3	4	Result of Lambda probe before catalyst ageing check (Test OFF / test ON / B1-P1 OK / B1-P1 n.OK)	B1-P1 OK	=> Page 44
			Dynamic factor of Lambda probe before catalyst		1.0... 4.0	---
		Catalyst temperature			at least 340.0 °C	---
	Engine speed (idling speed)				800...900 rpm	=> Page 33

Note on display zone 2:

Value calculated from engine speed and engine load.

Evaluating display group 34, display zone 4 - Lambda probe diagnosis before catalyst

Appears on display	Possible fault cause	Fault elimination
Lambda probe before catalyst not OK: B1-P1 n.OK.	- Fault stored in fault memory - Lambda probe before catalyst defective	- Read out fault memory Perform test again, if the result is the same: Check Lambda probe basic voltage before catalyst => Page 117

Display group 41 -Lambda regulation- Lambda probe heating

- Engine running at idling speed

Read measured value block 41 ⇒ ◂ Indicated on display

	Text	xxx	Text	◂ Display zones	Specification	Evaluation
1	2	3	4	Lambda probe heater after catalyst (Htg.aC.OFF / Htg.aC.ON)	Htg.aC.ON	---
			Lambda probe after catalyst internal resistance		to 300 ω	---
		Lambda probe heater before catalyst (Htg.bC.OFF / Htg.bC.ON)			Htg.bC.ON	---

satelettronica

Note on display zone 3:

This value is temperature dependent. Specifications are for an engine at operating temperature.

Display group 34 -Lambda regulation- Diagnosis of Lambda probe after catalyst						
▪ Engine running at idling speed ▪ Control unit in mode 04-Basic setting - Depress brake pedal						
Read measured value block 43			⇒	◂ Indicated on display		
xxxx rpm	xxx.x °C	x.xx V	Text	◂ Display zones	Specification	Evaluation
1	2	3	4	Result of diagnosis of Lambda probe after catalyst (Test OFF / Test ON / B1-P2 OK / B1-P2 n.OK)	B1-P2 OK	=> Page 45
				Lambda probe voltage Lambda probe after catalyst	0.00...1.00 V	=> Page 45
				Catalyst temperature	at least 340.0 °C	---
				Engine speed (idling speed)	800...900 rpm	=> Page 33

Note on display group 60:

The Lambda regulation after catalyst is the primary system and is used to guide the Lambda regulation before catalyst. It corrects light rich and lean displacements of the Lambda probe before catalyst by means of map-dependent correction displacements (max. + / - 2.5 %).

Evaluating display group 43, display zone 3 - Lambda probe voltage, Lambda probe after catalyst

Appears on display	Possible fault cause	Fault elimination
Constant 1.10 V	- Short to positive via: - Lambda probe, probe wiring, earth wiring, engine control unit	- Check Lambda probe basic voltage after catalyst => Page 120 - Check Lambda probe wiring Lambda probe after catalyst =>Page 121
Constant 0.00 V	- Short to earth via: - Lambda probe, probe wiring, earth wiring, engine control unit	
Constant between 0.39...0.50 V	- Open circuit via: - Lambda probe, probe wiring, earth wiring, engine control unit	

Evaluating display group 43, display zone 4 - Lambda probe diagnosis after catalyst

Appears on display	Possible fault cause	Fault elimination
Lambda probe after catalyst not OK.: B1-P2 n.OK.	- Fault stored in fault memory - Lambda probe after catalyst defective	- Read out fault memory Perform test again, if the result is the same: Check Lambda probe basic voltage after catalyst => Page 121

Display group 46 -Lambda regulation- Catalyst diagnosis (conversion test)
▪ Control unit in mode 04-Basic setting

satelettronica

- Depress brake pedal ▪ Vehicle stationary, engine runs at increased idling speed						
Read measured value block 46 ⇒				◂ Indicated on display		
xxxx rpm	xxx.x °C	x.xx %	Text	◂ Display zones	Specification	Evaluation
1	2	3	4	Result of catalyst conversion test (Test OFF / test ON / Cat B1 OK/Cat B1 n.OK)	Cat B1 OK	---
			Catalyst effect		min. 1%	=> Page 46
		Catalyst temperature			at least 340.0 °C	---
	Engine speed				1300...1500 rpm	---

Evaluating display group 46, display zone 3 - Catalyst efficiency

Appears on display	Possible fault cause	Fault elimination
Smaller than 1 %	- Catalyst defective	- Read out fault memory Perform test again, if the result is the same: Replace catalyst

Display group 70 -Reducing emissions- Activated charcoal filter system diagnosis (tank breathing system)						
▪ Engine running at idling speed ▪ Coolant temperature minimum 60 °C (display group 04, display zone 3) ▪ Control unit in mode 04-Basic settings						
Read measured value block 70 ⇒				◂ Indicated on display		
xxx %	xx.x %	xx.x %	Text	◂ Display zones	Specification	Evaluation
1	2	3	4	Result of diagnosis (Test ON / OFF or TVV OK / n.OK)	TVV OK	=> Page 46
			Idling speed regulation deviation for TW diagnosis		-50...50 %	---
		Lambda regulation deviation for TW diagnosis			-50...50 %	---
	Activated charcoal filter system solenoid valve 1 duty cycle				0...100 %	---

Note:

TBV means fuel tank breathing valve (activated charcoal filter system solenoid valve 1). The diagnosis can only be initiated once per engine start.

Notes on display zone 2:

- Lambda regulator deviation in negative range: Activated charcoal filter full
- Lambda regulator deviation in positive range: Activated charcoal filter empty

Evaluating display group 70, display zone 4 - Tank venting system diagnosis

Appears on display	Possible fault cause	Fault elimination
Check has not been performed or is not complete: Test OFF	- Fault stored in fault memory - Conditions for performing diagnosis have not been achieved	- Read fault memory Check test prerequisites, repeat test

Copyright by Volkswagen AG. Volkswagen AG does not guarantee or accept any liability with respect to the correctness of information in this document. Copyright by Volkswagen AG. Reproduction, in part or in whole, is not permitted unless authorised by Volkswagen AG for purposes
satelettronica

Tank venting system not functioning correctly: TW n.OK.	- Fault stored in fault memory - Hose connections between tank vent valve and intake pipe not connected/leaking - Hose connections between tank vent valve and intake pipe blocked/ not through flow - Tank vent valve defective	- Read fault memory Fit hose/renew Check activated charcoal filter solenoid valve 1 => Page 22 , Final control diagnosis Check hose for through flow, replace if necessary, repeat test Exchange tank vent, repeat test

11 - Evaluating measured value blocks, display groups 50...69 -Speed regulation-

11.1 - Evaluating measured value blocks, display groups 50...69 -Speed regulation-

Display group 50 -Speed regulation- Operating condition						
▪ Engine running at idling speed						
Read measured value block 50 ⇒				◂ Indicated on display		
xxxx rpm	xxxx rpm	Text	Text	◂ Display zones	Specification	Evaluation
1	2	3	4	Air conditioner compressor operating mode (Compr. ON / Compr. OFF)	Compr. ON or Compr. OFF	---
				Air conditioner operating mode (on / off)	ON or OFF	---
				Engine speed (idling speed specification) ▪ Air conditioner compressor OFF ▪ Air conditioner compressor ON	830 rpm 900 rpm	---
				Engine speed (idling speed) ▪ Air conditioner compressor OFF ▪ Air conditioner compressor ON	800...900 rpm 850...930 rpm	=> Page 33

Note on display zone 2:

The specified engine speed from the engine control unit is displayed (temperature dependent internally calculated control unit value).

Notes on display zone 4:

- "Compr. OFF" is always displayed on vehicles without air conditioner.
- Checking signal from and to air conditioner compressor =>Page 134 .

Display group 54 -Speed regulation-						
▪ Whilst driving						
Read measured value block 54 ⇒				◂ Indicated on display		
xxxx rpm	Text	xxx %	xxx.x %	◂ Display zones	Specification	Evaluation
1	2	3	4	Throttle valve angle sender 1 for throttle valve drive (G187)	0.0...100.0 %	---
				Accelerator pedal position sender (G79)	0...100%	---
				Operating mode: (Idling, part throttle, enrichment, overrun, full throttle)	---	---
				Engine speed	800..6500 rpm	---

Protected by copyright. Copyrighting for private commercial purposes only permitted unless authorised by Volkswagen AG. Volkswagen AG does not guarantee or accept any liability with respect to the correctness of information in this document. Copyright by Volkswagen AG.
satelettronica

Display group 55 -Speed regulation- Idling stabilisation						
▪ Engine running at idling speed						
Read measured value block 55			⇒	◂ Indicated on display		
xxxx rpm	xx %	xx.x %	xxxxx			
1	2	3	4	◂ Display zones	Specification	Evaluation
				Operating mode	xxxxx	=> Page 48
			Idling speed stabilisation learnt value		-10.0...10.0 %	---
		Idling speed regulator			-10...20 %	---
	Engine speed (idling speed)				800...900 rpm	=> Page 33

Note on display zone 3:

Displayed is the amount that the idling speed stabilisation has moved away from the prescribed average. For a new engine the values lie in the positive range, because of the higher friction and in the negative range with an engine that has run-in.

Significance of figures in 5-digit number block, display zone 4 - operating modes

Significance if display = 1					
1	2	3	4	5	Significance
				1	Air conditioner compressor switched on
			x		Not relevant
		1			Air conditioning system switched on
	x				Not relevant
x					Not relevant

Display group 56 -Speed regulation- Idling speed stabilisation						
▪ Engine running at idling speed						
Read measured value block 56			⇒	◂ Indicated on display		
xxxx rpm	xxxx rpm	xx %	xxxxx			
1	2	3	4	◂ Display zones	Specification	Evaluation
				Operating mode	xxxxx	=> Page 48
			Idling regulator		-10...20 %	---
		Engine speed (idling speed specification)			830 rpm	---
	Engine speed (idling speed)				800...900 rpm	=> Page 33

Note on display zone 2:

The specified engine speed from the engine control unit is displayed (temperature dependent internally calculated control unit value).

Display group 57 -Speed regulation- Idling speed stabilisation						
▪ Engine running at idling speed						
Read measured value block 57			⇒	◂ Indicated on display		
xxxx rpm	xxxx rpm	Text	xx %			
1	2	3	4	◂ Display zones	Specification	Evaluation
				Air conditioner readiness ▪ Air conditioner off ▪ Air conditioner on	0...2 % 15...80 % (fluctuating)	---

satelettronica

		Air conditioner compressor operating mode (Compr. ON / Compr. OFF)	Compr. ON or Compr. OFF	---
		Engine speed (idling speed specification) ▪ Air conditioner compressor OFF ▪ Air conditioner compressor ON	830 rpm 900 rpm	---
	Engine speed (idling speed) ▪ Air conditioner compressor OFF ▪ Air conditioner compressor ON		800...900 rpm 850...930 rpm	=> Page 33

Note on display zone 2:

The specified engine speed from the engine control unit is displayed (temperature dependent internally calculated control unit value).

Display group 60 -Speed regulation- Adaption EPC system 1)						
▪ Ignition on, engine not running ▪ Control unit in mode 04 basic setting						
Read measured value block 60			⇒	◂ Indicated on display		
xxx.x %	xxx.x %	x	Text			
1	2	3	4	◂ Display zones	Specification	Evaluation
				Adaption condition (ADP runs / ADP OK / ADP ERROR)	ADP OK	---
				Learning step counter	0...8	---
				Throttle valve angle sender 2 for throttle valve drive (G188)	100.0...0.0 %	---
				Throttle valve angle sender 1 for throttle valve drive (G187)	0.0...100.0 %	---

1) Erase learnt values and adapt engine control unit to throttle valve control part => Page 128 .

Note on display group 60:

- Matching the throttle valve control part is performed with ignition switched on.
- Engine control unit is adapted to throttle valve control unit when selecting display group 60 under function 04 "Basic setting". This adaption must always be carried out when another throttle valve control part (or another complete engine) or another engine control unit is fitted.
- The specifications indicated in display zones 1 and 2 do not fully reach the max. min. figures.
- During adaption the counter in display zone 3 counts up from 0 to 8.

Display group 61 -Speed regulation- Electronic accelerator system						
▪ Whilst driving						
Read measured value block 61			⇒	◂ Indicated on display		
xxxx rpm	xx.x V	xxx.x %	xxxxx			
1	2	3	4	◂ Display zones	Specification	Evaluation
				Operating mode	xxxxx	=> Page 48
				Throttle valve angle sender 1 for throttle valve drive (G187)	0.0...100.0 %	---
				Voltage supply for engine control unit	11.5...15.0 V	=> Page 35
				Engine speed	800..6500 rpm	---

Display group 62 -Speed regulation- Electronic accelerator system				
▪ Ignition on, engine not running				
Read measured value block 62			⇒	◂ Indicated on display
xxx.x %	xxx.x %	xxx.x %	xxx.x %	

satelettronica

1	2	3	4	◂ Display zones	Specification	Evaluation
				Accelerator pedal position sender 2 (G185)	0.0...49.0 %	---
			Accelerator pedal position sender (G79)		0.0..98.0 %	---
		Throttle valve angle sender 2 for throttle valve drive (G188)			100.0...00.0 %	---
	Throttle valve angle sender 1 for throttle valve drive (G187)				0.0...100.0 %	---

Notes on display group 62:

- The throttle valve control part potentiometer and the pedal value sender are installed in pairs for reasons of safety. The engine control unit continually checks the plausibility of the potentiometer.
- The value displayed by the accelerator pedal position sender 2 (G185) must always be approx. half the value displayed by the accelerator pedal position sender (G79).
- The throttle valve control part angle senders counter oppose one another. The values of both senders added together always equal approx. 100 %.
- The specifications do not fully reach the max. min. figures.

Display group 66 -Idling regulation- Additional signals

▪ Ignition on, engine not running

Read measured value block 66 ⇒ ◂ Indicated on display

xxx km/h xxxx xxx km/h xxxx

1	2	3	4	◂ Display zones	Specification	Evaluation
				Display not relevant	Not relevant	---
			Display not relevant		Not relevant	---
		Switch status from: ▪ Clutch pedal switch (F36) ▪ Brake light switch (F) and brake pedal switch(F47)			x000	=> Page 50
	Road speed (actual)				0 km/h	---

Notes on display zone 2:

- Checking signal from clutch pedal switch => Page 138
- Checking signal from brake light switch and brake pedal switch => Page 140

Significance of the figures in the 4 digit display, display zone 2 - switch positions

Significance if display = 1				
1	2	3	4	Significance
			1	Brake depressed (brake light switch -F)
		1		Brake depressed (brake pedal switch -F47)
	1			Clutch depressed (clutch pedal switch -F36)
x				Not relevant

Protected by copyright. Copying for private or commercial purposes, in part or in whole, is not permitted unless authorised by Volkswagen AG. Volkswagen AG does not guarantee or accept any liability with respect to the correctness of information in this document. Copyright by Volkswagen AG.
satelettronica

12 - Evaluating measured value blocks, display groups 91...95 -Performance increase-

12.1 - Evaluating measured value blocks, display groups 91...95 -Performance increase-

Display group 91 -Performance increase- Camshaft adjustment						
▪ Whilst driving						
Read measured value block 91			⇒	◂ Indicated on display		
xxxx rpm	xxx.x %	Text	xx.x°ATDC			
1	2	3	4	◂ Display zones	Specification	Evaluation
				Active adjustment angle of inlet camshaft	-1.0...40.0 ° ATDC	---
			Inlet camshaft adjustment (on / off)		on	---
		Engine load			40.0...100.0 %	---
	Engine speed				800..6500 rpm	---

Display group 93 -Performance increase- Inlet camshaft adjustment position (phase position)						
▪ Engine running at idling speed						
Read measured value block 93			⇒	◂ Indicated on display		
xxxx rpm	xxx.x %	xx.x°ATDC				
1	2	3	4	◂ Display zones	Specification	Evaluation
			Adjustment position of inlet camshaft		-1.0...8.0 ° ATDC	=> Page 51
		Engine load			0.0...100.0 %	---
	Engine speed				800..6500 rpm	---

Note on display zone 3:

- The Hall sender (G40) on the inlet camshaft is a reference mark sender. The reference mark signal is created by a segment in the camshaft.
- The angle of the camshaft segment is 180°, therefore for one half turn of the camshaft the segment is positioned for the Hall sender and for the other half turn it is not.
- The inlet camshaft is adjusted by the camshaft adjustment valve (N205). The signal from the Hall sender is used by the engine control unit as a check of the position of the camshaft.
- When the camshaft adjustment is not active and inlet camshaft is in the retarded position, then the position of the camshaft segment is learnt by the engine control unit when the engine is running.
- This learnt value is therefore an indication that the inlet camshaft is installed correctly or if the timing is offset because coupling drive toothed belt has jumped.

Evaluating display group 93, display zone 3 - Adjustment position of inlet camshaft

Appears on display	Possible fault cause	Fault elimination
Less than specification	- Hall sender (G40) defective	- Check Hall sender => Page 150
	- Incorrect Hall sender (G40) installed	- Check part number (Hall sender has a complete grey housing): => Parts catalogue
	- Timing incorrectly adjusted (inlet camshaft runs retarded)	- Check timing: => Repair group 15; Removing and installing cylinder head
More than specification	- Hall sender (G40) defective	- Check Hall sender => Page 150

satelettronica

	- Incorrect Hall sender (G40) installed	- Check part number (Hall sender has a complete grey housing): => Parts catalogue
	- Timing incorrectly adjusted (inlet camshaft runs advanced)	- Check timing: => Repair group 15; Removing and installing cylinder head

Display group 94 -Performance increase- Functional check of position of camshaft						
▪ Control unit in mode 04-Basic setting - Set engine speed to 2500...6000 rpm with speed setter V.A.G 1788/10. ▪ Vehicle stationary, engine runs at increased idling speed						
Read measured value block 94			⇒	◂ Indicated on display		
xxxx rpm	xxx.x %	Text				
1	2	3	4	◂ Display zones	Specification	Evaluation
			Diagnosis result of functional check (Test ON / Test OFF / Syst. OK / Syst. n.OK)		Syst. OK	=> Page 52
		Operating mode of camshaft adjustment (CS-ctrl.ON / CS-ctrl.OFF)			CS-ctrl.ON	=> Page 52
	Engine speed				2500...6000 rpm	---

Evaluating display group 94, display zone 2 - Operating mode of camshaft adjustment

Appears on display	Possible fault cause	Fault elimination
CS-ctrl.OFF	- Engine control unit performs adaption of adjustment position (phase position) of inlet camshaft	- Wait a moment
	- Camshaft adjuster sticking/defective - Camshaft adjustment valve (N205) sticking/defective	- Check camshaft adjustment valve: => Repair group 15; Servicing valve gear; Checking camshaft adjustment Checking camshaft adjustment

Evaluating display group 94, display zone 3 - Functional check of camshaft adjustment

Appears on display	Possible fault cause	Fault elimination
Test OFF	- Engine oil temperature too high (greater than 110 °C)	- Allow engine to cool
	- Engine speed not within prescribed speed range	- Set engine speed to 2500...6000 rpm
	- Camshaft adjuster sticking/defective - Camshaft adjustment valve (N205) sticking/defective	- Check camshaft adjustment valve: => Repair group 15; Servicing valve gear; Checking camshaft adjustment Checking camshaft adjustment
Syst. n.OK	- Heavily diluted oil in conjunction with high engine oil temperatures (greater 110 °C)	- Allow engine to cool or replace engine oil
	- Oil pressure in cylinder head too low	- Check oil pressure: => Repair group 17; Removing and installing parts of lubrication system; Checking oil pressure and oil pressure switch Checking oil pressure and oil pressure switch

Protected by copyright. Copyright by Volkswagen AG. Volkswagen AG does not guarantee or accept any liability with respect to the correctness of information in these repair documents. The transmission, duplication or publication of this document or its contents, in part or in whole, is not permitted unless authorised by Volkswagen AG. For private or commercial purposes only.

satelettronica

	- Camshaft adjuster sticking/defective - Camshaft adjustment valve (N205) sticking/defective	- Check camshaft adjustment valve: => Repair group 15; Servicing valve gear; Checking camshaft adjustment Checking camshaft adjustment

13 - Evaluating measured value blocks, display groups 120...129 -Communication-

13.1 - Evaluating measured value blocks, display groups 120...129 -Communication-

Display group 125 -Communication -data bus messages-						
▪ Engine running at idling speed Read measured value block 125			⇒	◂ Indicated on display		
Text		Text	Text			
1	2	3	4	◂ Display zones	Specification	Evaluation
				Airbag system status	Airbag 1	---
			Combi-instrument status		Combi 1	---
	Anti-lock brake system status				ABS 1	---

Note on display group 125:

Specification = 1; Control units with active data bus are displayed.

Protected by copyright. Copying for private or commercial purposes, in part or in whole, is not permitted unless authorised by Volkswagen AG. Volkswagen AG does not guarantee or accept any liability with respect to the correctness of information in this document. Copyright by Volkswagen AG.

satelettronica

24 - Mixture preparation, Injection

Copyright by Volkswagen AG. Volkswagen AG does not guarantee or accept any liability with respect to the correctness of information in this document. Copyright by Volkswagen AG. Commercial purposes, in part or in whole, is not permitted unless authorised by Volkswagen AG. Any copy or other reproduction of this document, in part or in whole, requiring the consent of Volkswagen AG, is not permitted.

1 - Servicing injection system

1.1 - Servicing injection system

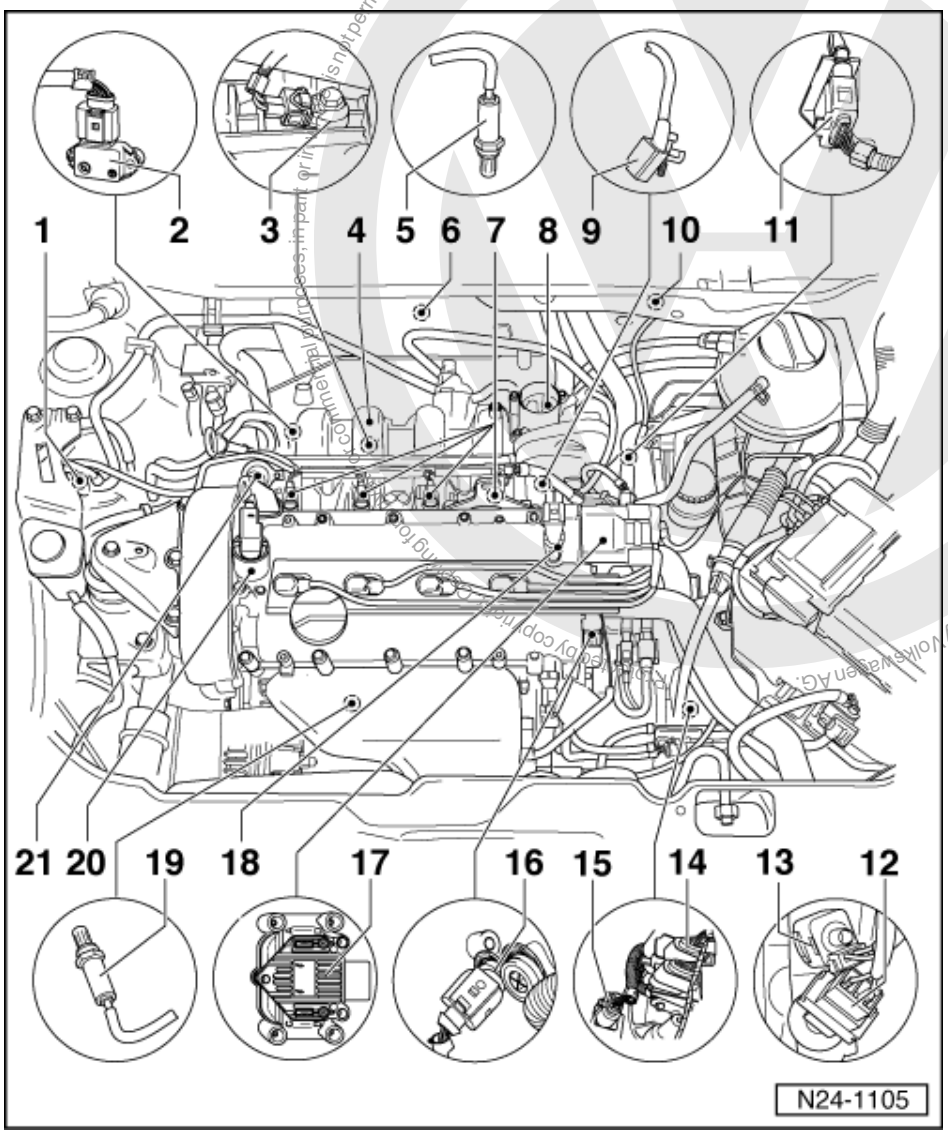

1.2 - Fitting locations overview

Removing and installing cover over camshaft housing

=> Page 76 , Fig. 1

Removing and installing air cleaner => Page 76 , Fig. 2

1 **Activated charcoal filter solenoid valve 1 (N80)**
- Checking => Page 22 , Final control diagnosis

satelettronica

- Activated charcoal filter system

=> Repair group 20; Activated charcoal filter system Activated charcoal filter system

2 Intake manifold pressure sender (G71) with intake air temperature sender (G42)
3 Knock sensor 1 (G61)
- => Page 147 , item 8

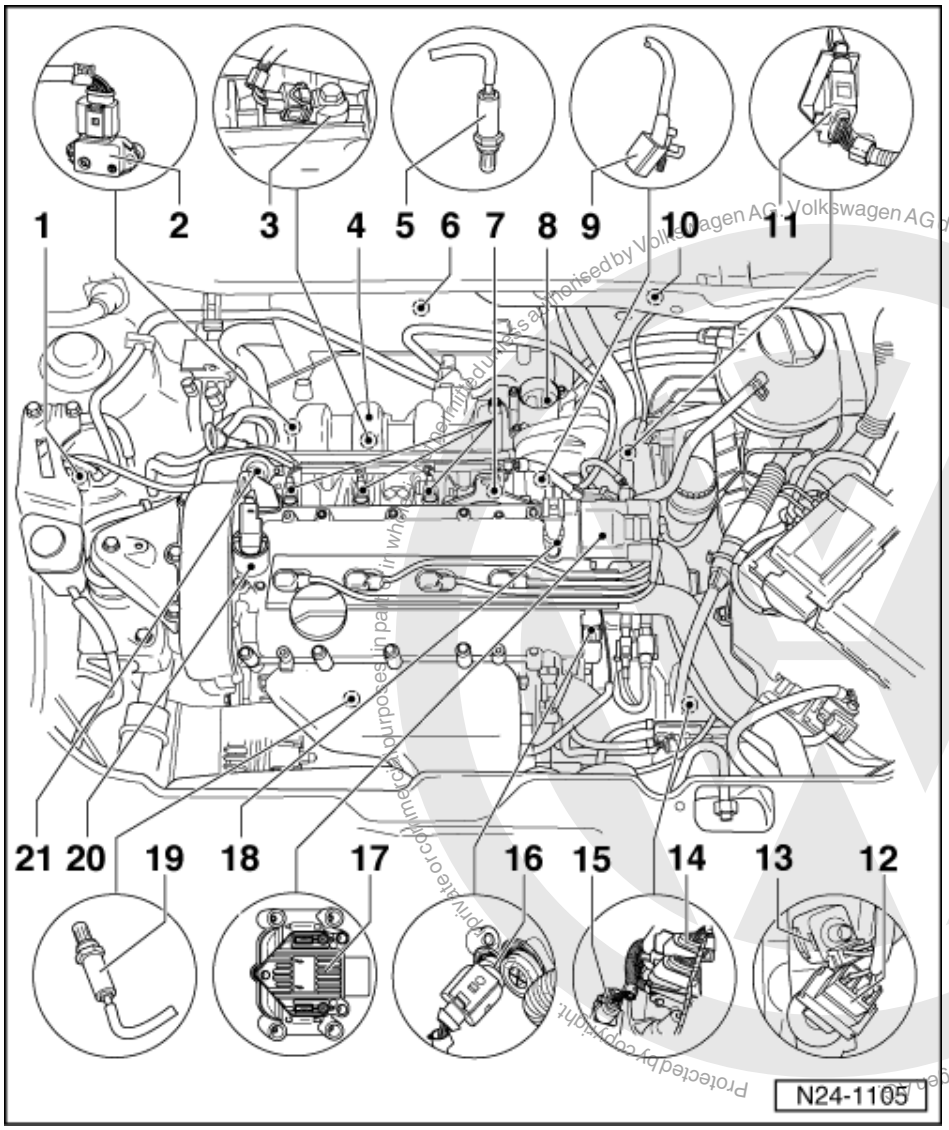

4 Intake manifold
- Dismantling and assembling => Page 68

5 Lambda probe 2 after catalyst (G130)*, 50Nm
- Location: Behind catalyst
- When renewing, erase learnt values and adapt engine control unit to throttle valve control part=> Page 128
- Grease only the threads with "G 052 112 A3"; "G 052 112 A3" must not get into the slots on the probe body
- Probe heating voltage supply via fuel pump relay (J17)
- Checking Lambda probe heating for Lambda probe after catalyst => Page 82
- Checking Lambda probe and Lambda regulation after catalyst => Page 118

satelettronica

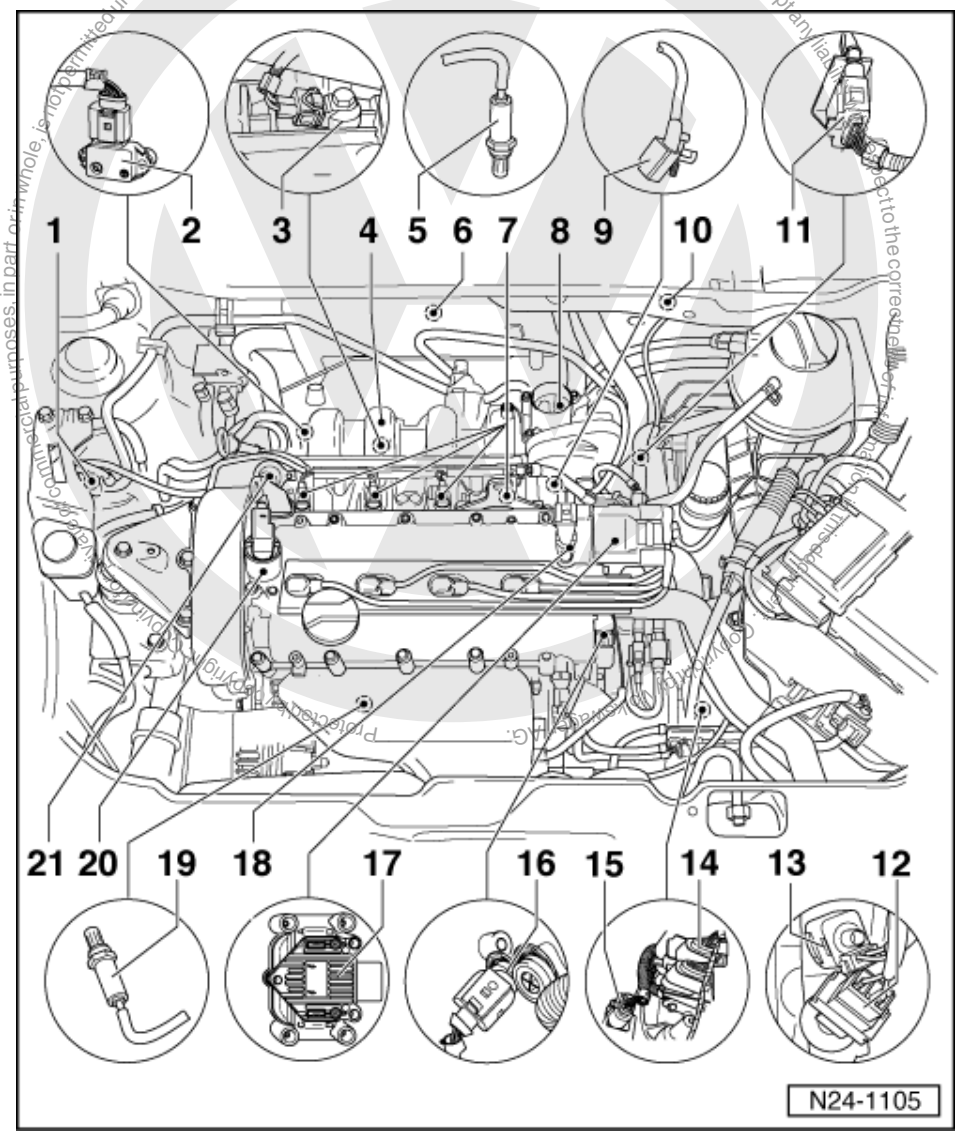

6 Engine control unit
(Control unit for Simos injection and ignition system -J361)
- Fitting location: In plenum chamber

7 Injector (N30...N33)

8 Throttle valve control part (J338)

9 Engine speed sender (G28)
- Fitting location: cylinder block intake side

10 Earth connection
- Fitting location: In plenum chamber

11 3 pin connector
- Black
- For engine speed sender (G28)

satelettronica

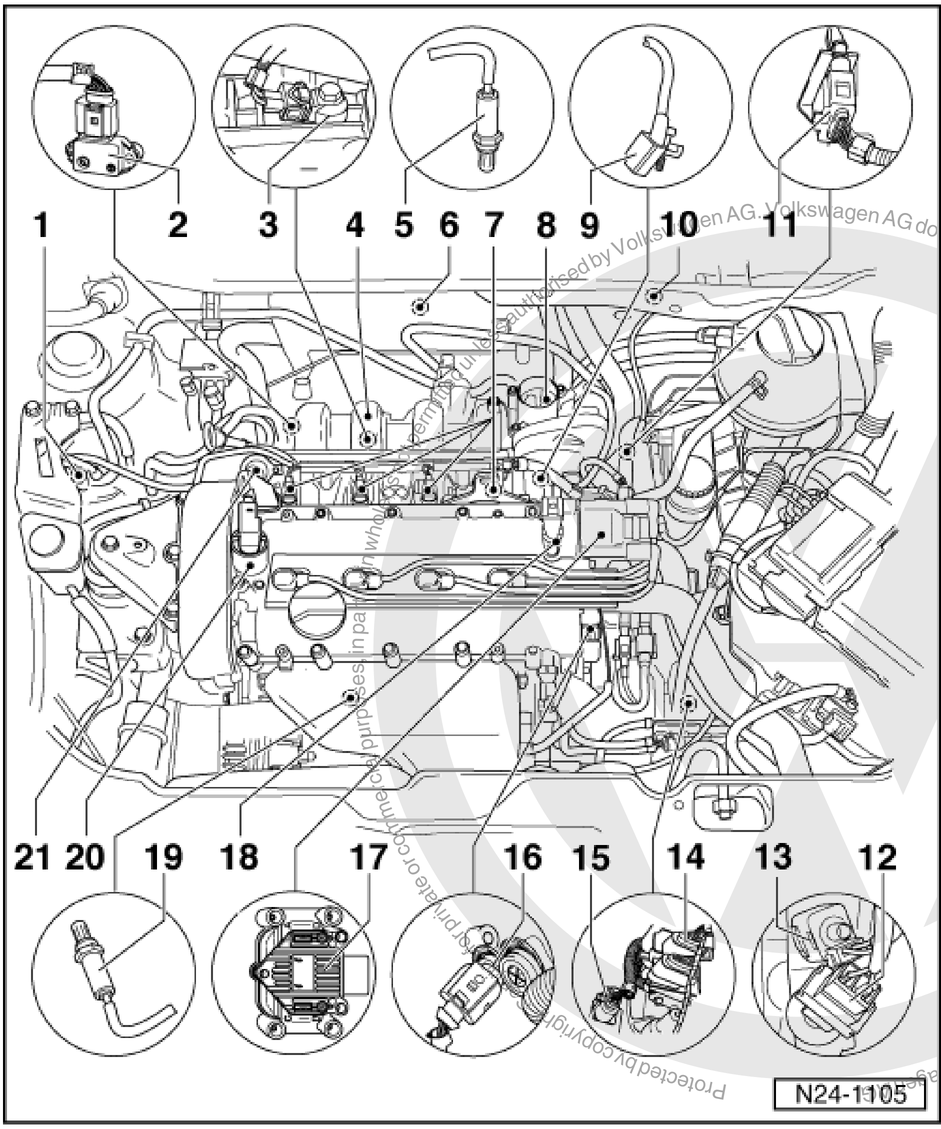

Protected by copyright. Copying for private or commercial purposes, in part or in whole, is not permitted unless authorised by Volkswagen AG. Volkswagen AG does not guarantee or accept any liability with respect to the correctness of information in this document. Copyright by Volkswagen AG.

12 Brake light switch (F) and brake pedal switch(F47)

- In footwell on brake pedal
- Checking signals from brake light switch and brake pedal switch => Page 140

13 Clutch pedal switch (F36)

- In footwell on clutch pedal
- Checking signals from clutch pedal switch => Page 138

14 4-pin connector

- Black
- For Lambda probe 2 after catalyst (G130) and Lambda probe heating (Z29)
- Left on underside of vehicle

satelettronica

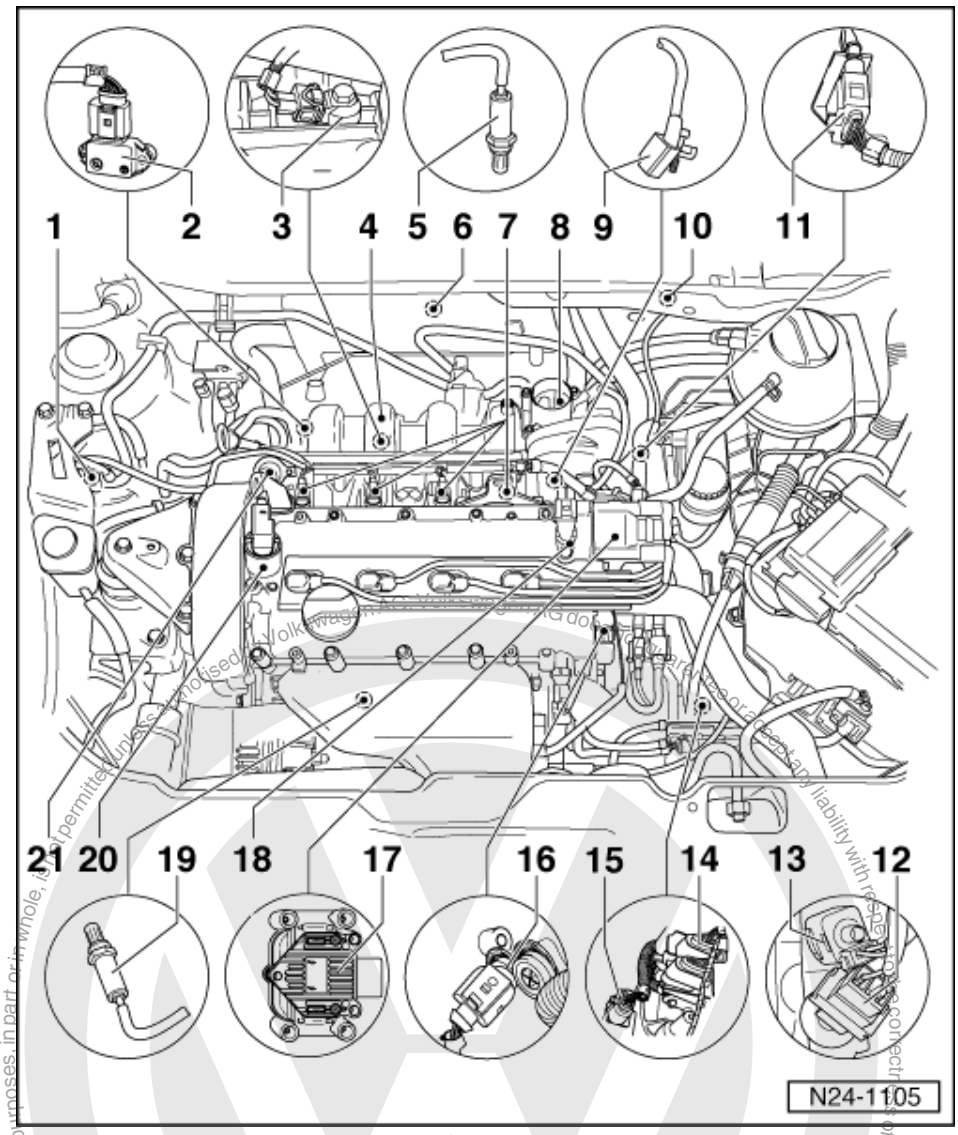

15 6-pin connector
- Black
- For Lambda probe 1 before catalyst (G39) and Lambda probe heater (Z19)
- Left on underside of vehicle

16 Coolant temperature sender (G62)
- With coolant temperature gauge sender (G2)

17 Ignition transformer (N152)
- With ignition cable identification, do not interchange
- => Page 147 , item 4

18 Hall sender (G40)
- => Page 148 , item 11

satelettronica

Protected by copyright. Copying for private or commercial purposes, in part or in whole, is not permitted unless authorised by Volkswagen AG. Volkswagen AG does not guarantee or accept any liability with respect to the correctness of information in this document. Copyright by Volkswagen AG.

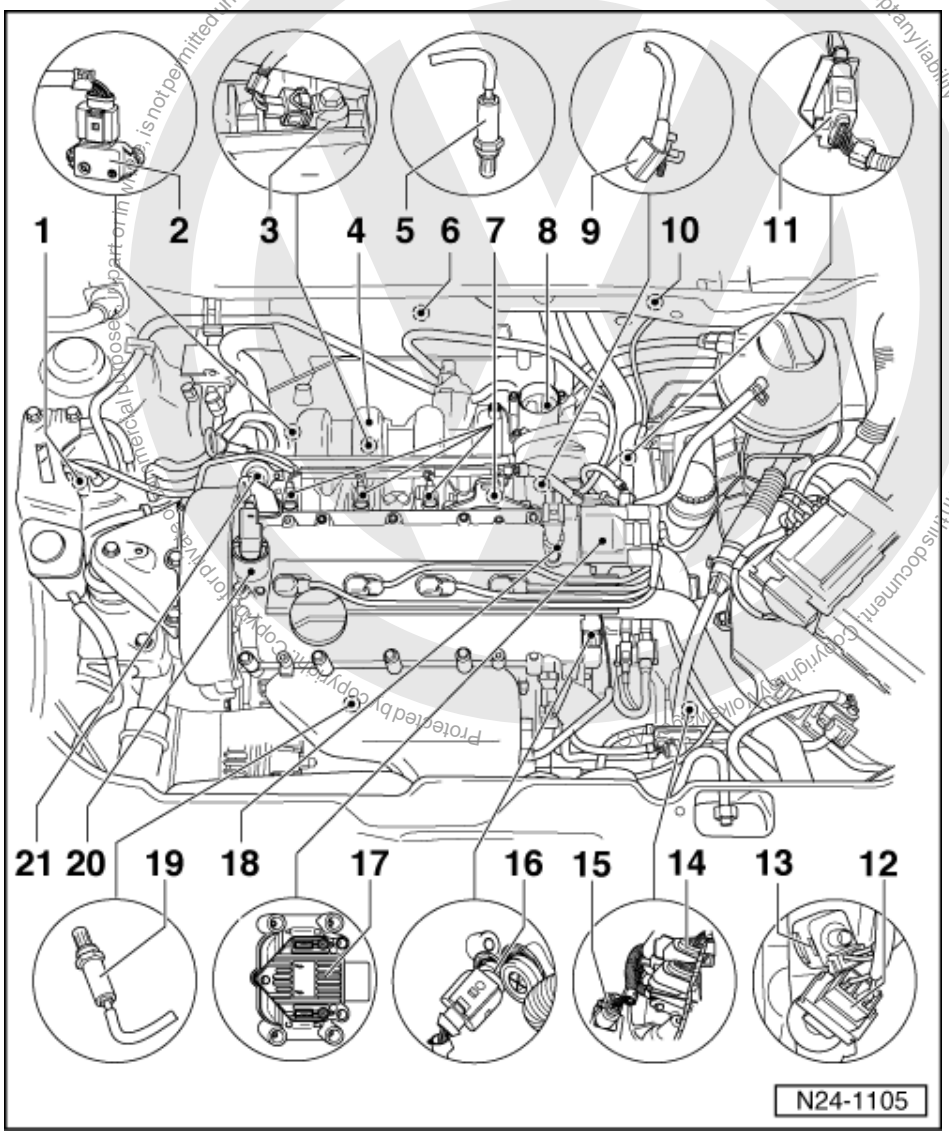

19 Lambda probe 1 before catalyst (G39), 50Nm

- Location: in front exhaust pipe
- When renewing, erase learnt values and adapt engine control unit to throttle valve control part=> Page 128
- Constantly operating Lambda probe
- Grease only the threads with "G 052 112 A3"; "G 052 112 A3" must not get into the slots on the probe body
- Probe heating voltage supply via fuel pump relay (J17)
- Checking Lambda probe heating before catalyst => Page 79
- Checking Lambda probe and Lambda regulation before catalyst => Page 113

satelettronica

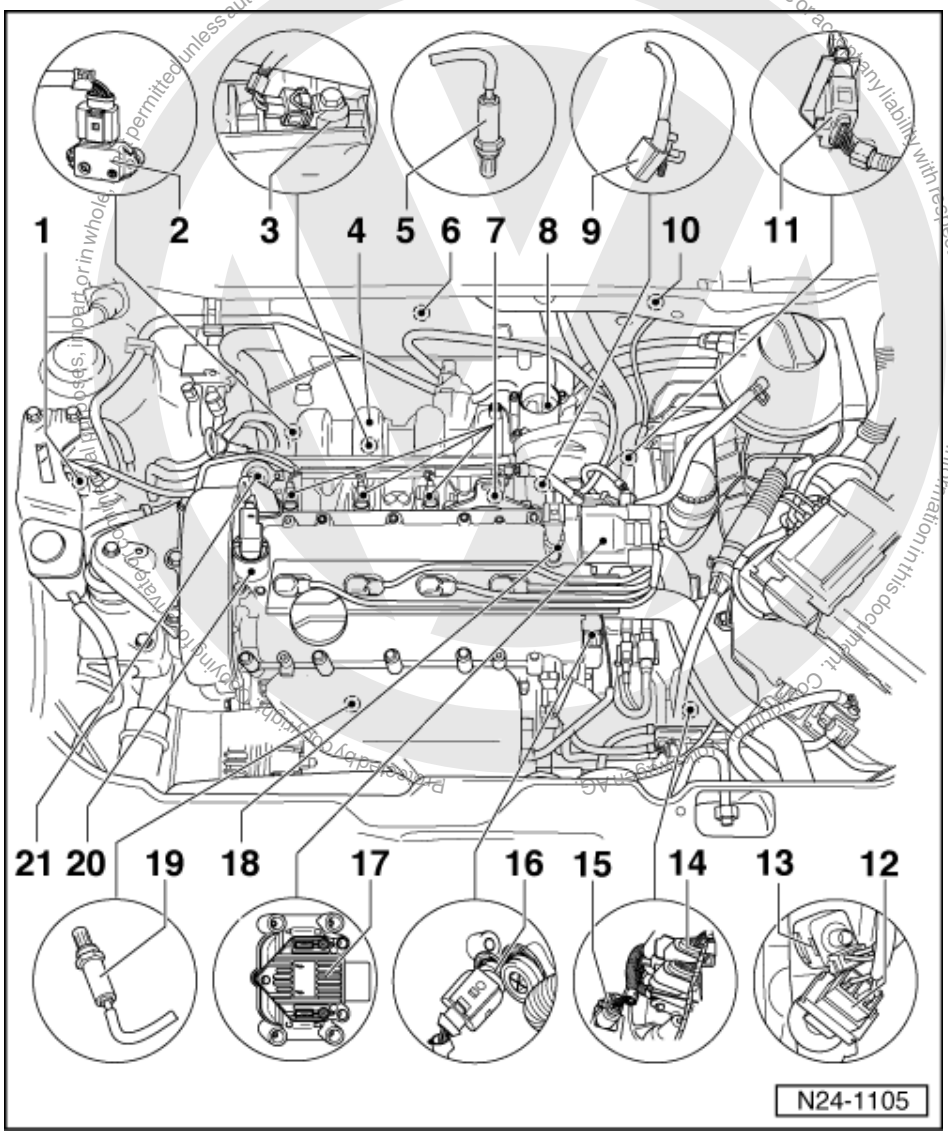

20 Camshaft adjuster valve (N205)

- Checking camshaft adjustment:

=> Repair group 15; Servicing valve gear; Checking camshaft adjustment Servicing valve gear Checking camshaft adjustment

21 Fuel pressure regulator

1.3 - General notes on injection

Servicing ignition part:

=> Repair group 28

- The engine control unit is equipped with self-diagnosis. Before carrying out repairs and fault finding the fault memories of all control units must be interrogated. This is necessary because various control units are interconnected via a data bus. Also the vacuum hoses and connections must be checked (unmetered air).
- Disconnecting and connecting the battery must only be done with the ignition switched off, otherwise the engine control unit could be damaged.
- Fuel hoses in engine compartment must only be secured with spring type clips. The use of clamp or screw type clips is not permissible.
- Components marked with * are checked via the self diagnosis

satelettronica

=> Page 8 , interrogating and erasing fault memory.
- Components marked with **can be checked with the final control diagnosis => Page 22 .
- For trouble-free operation of the electrical components, a voltage of at least 11.5 V is necessary.

- Do not use sealants containing silicone. Particles of silicone drawn into the engine will not be burnt in the engine and will therefore damage the Lambda probe.
- If the engine starts, runs for a short period and then stops, after fault finding, repairs or component tests, then the fault may lie with the immobilizer which is blocking the engine control unit. The fault memory must be interrogated and if necessary the control unit matched => Page 130 .
- During some checks it is possible that the control unit will recognise and store a fault. Therefore after completing all checks and repairs the fault memory must be interrogated and if necessary erased.
  => Page 8 , interrogating and erasing fault memory

Safety precautions =>Page 77
Rules for cleanliness => Page 78
Technical data => Page 78
Checking intake system for leaks (unmetered air) => Page 111 .
Checking engine operating mode => Page 122

1.4 - Removing and installing parts of the injection system

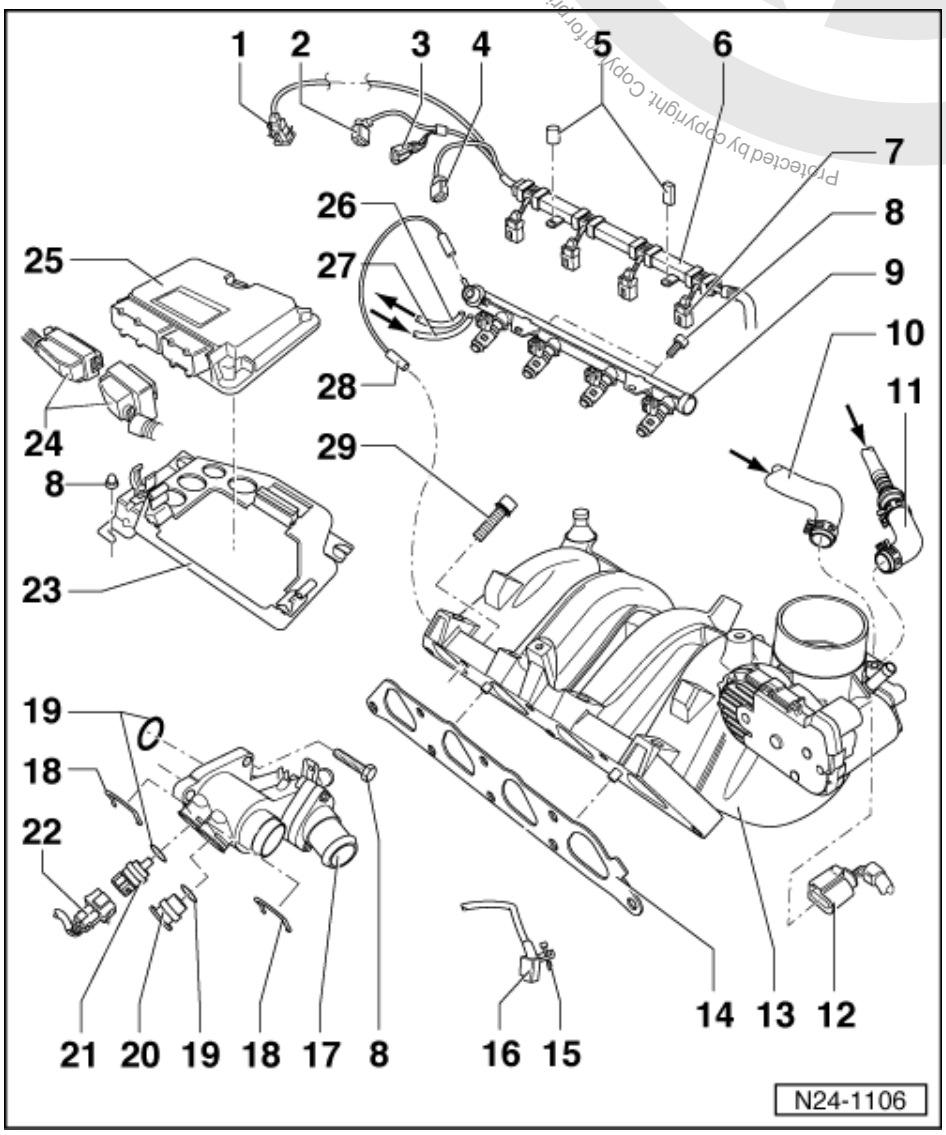

satelettronica

Removing and installing cover over camshaft housing
=> Page 76 , Fig. 1
Removing and installing air cleaner => Page 76 , Fig. 2

1 Connector
- Black, 2-pin
- For knock sensor 1 (G61)
- Connector contacts are gold-plated

2 Connector
- Black, 2-pin
- For crankcase breather heater element (N79)
- Check heater element voltage supply between contacts 1 and 2 with engine running:
  Specification:
  At least 11.5 V

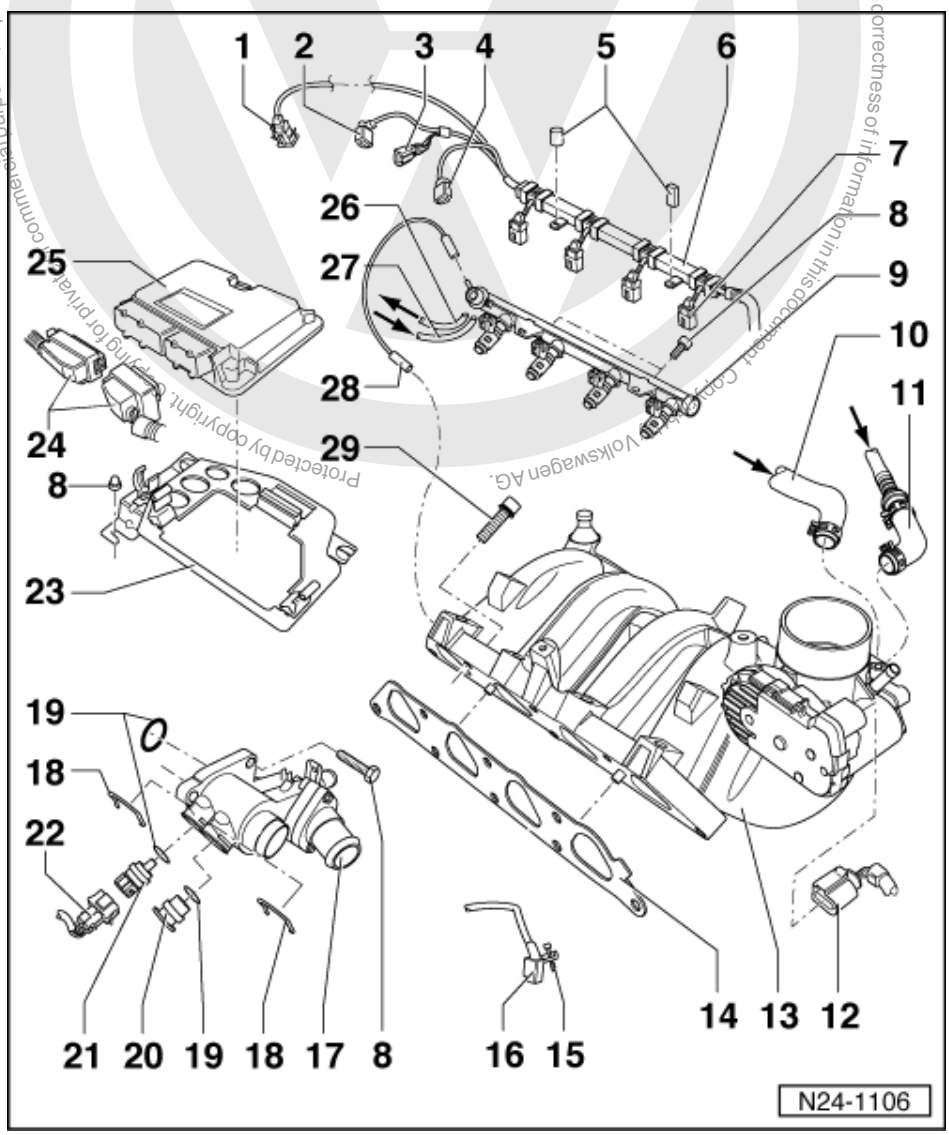

3 Connector
- Black, 4-pin
- For intake manifold pressure sender and sender for intake air temperature in intake manifold
- Connector contacts are gold-plated

4 Connector
- Black, 2-pin
- With camshaft adjustment valve (N205)

Protected by copyright. Copying for private or commercial purposes, in part or in whole, is not permitted unless authorised by Volkswagen AG. Volkswagen AG does not guarantee or accept any liability with respect to the correctness of information in this document. Copyright by Volkswagen AG.
satelettronica

5 Securing clip
- Note version

6 Cable/line guide
- Clipped onto fuel rail

7 Connector
- Black, 2-pin
- For injector (N30...N33)

8 10 Nm

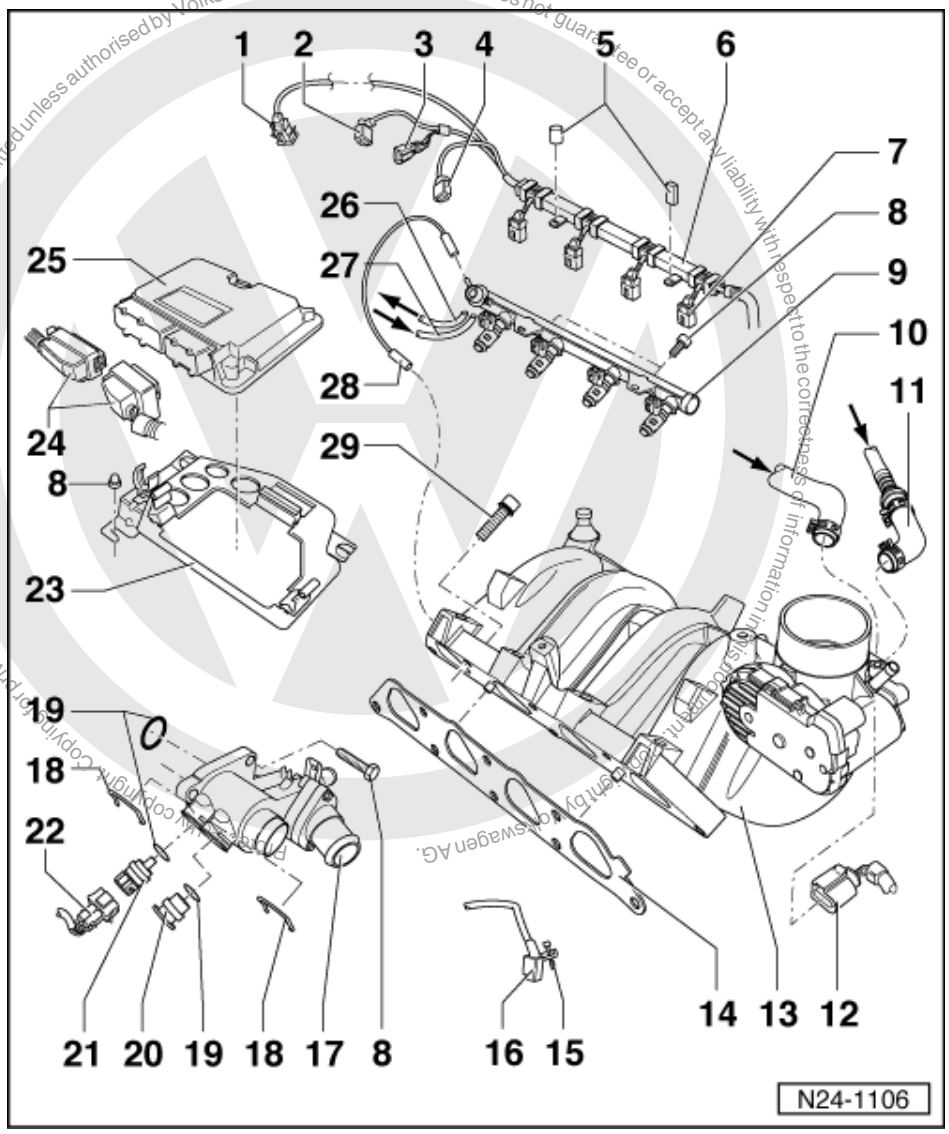

9 Fuel rail with injectors
- Dismantling and assembling => Page 71

10 From brake servo
- Secure with spring-type clips

11 From activated charcoal filter solenoid valve (N80)*/**

=> Repair group 20; Activated charcoal filter system Activated charcoal filter system
- Secure with spring-type clips

12 Connector
- Black, 6-pin
- For throttle valve control part (J338)

Copyright by Volkswagen AG. Volkswagen AG does not guarantee or accept any liability with respect to the correctness of information in this document. Copyright by Volkswagen AG. Reproduction, copying, copying for private or commercial purposes, in part or in whole, is not permitted unless authorised by Volkswagen AG.
satelettronica

Protected by copyright. Copying for private or commercial purposes, in part or in whole, is not permitted unless authorised by Volkswagen AG. Volkswagen AG does not guarantee or accept any liability with respect to the correctness of information in this document. Copyright by Volkswagen AG.

13 Intake manifold
- Dismantling and assembling => Page 68

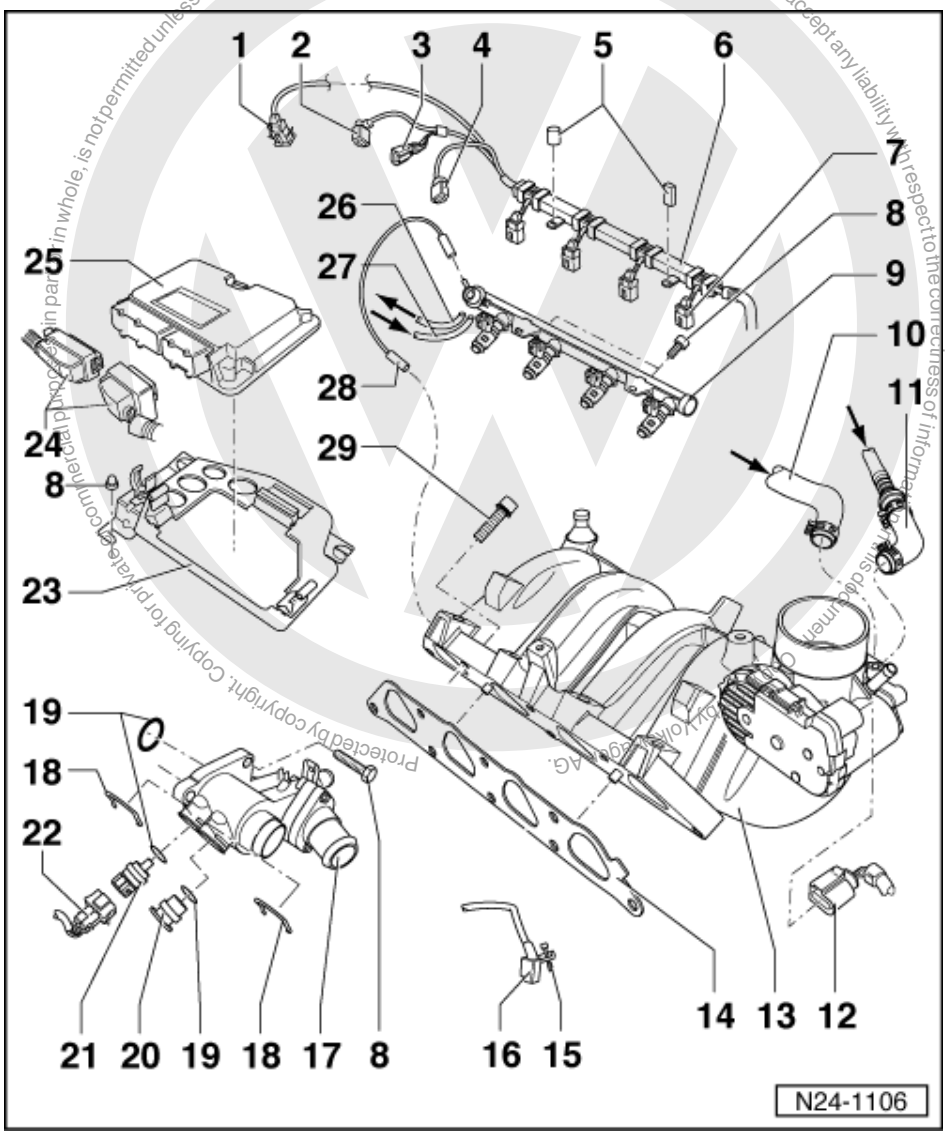

14 Gasket
- Renew

15 5 Nm

16 Engine speed sender (G28)*
- Fitting location => Page 54 , fitting location overview
- Checking => Page 98
- To remove, remove starter

=> Electrical system; Repair group 27; Starter; Removing and installing starter Starter Removing and installing starter

17 Thermostat housing

18 Retaining clip
- Check seated securely

19 O-ring
- Renew if damaged

20 Plug

satelettronica

- If necessary release pressure in cooling system before removing

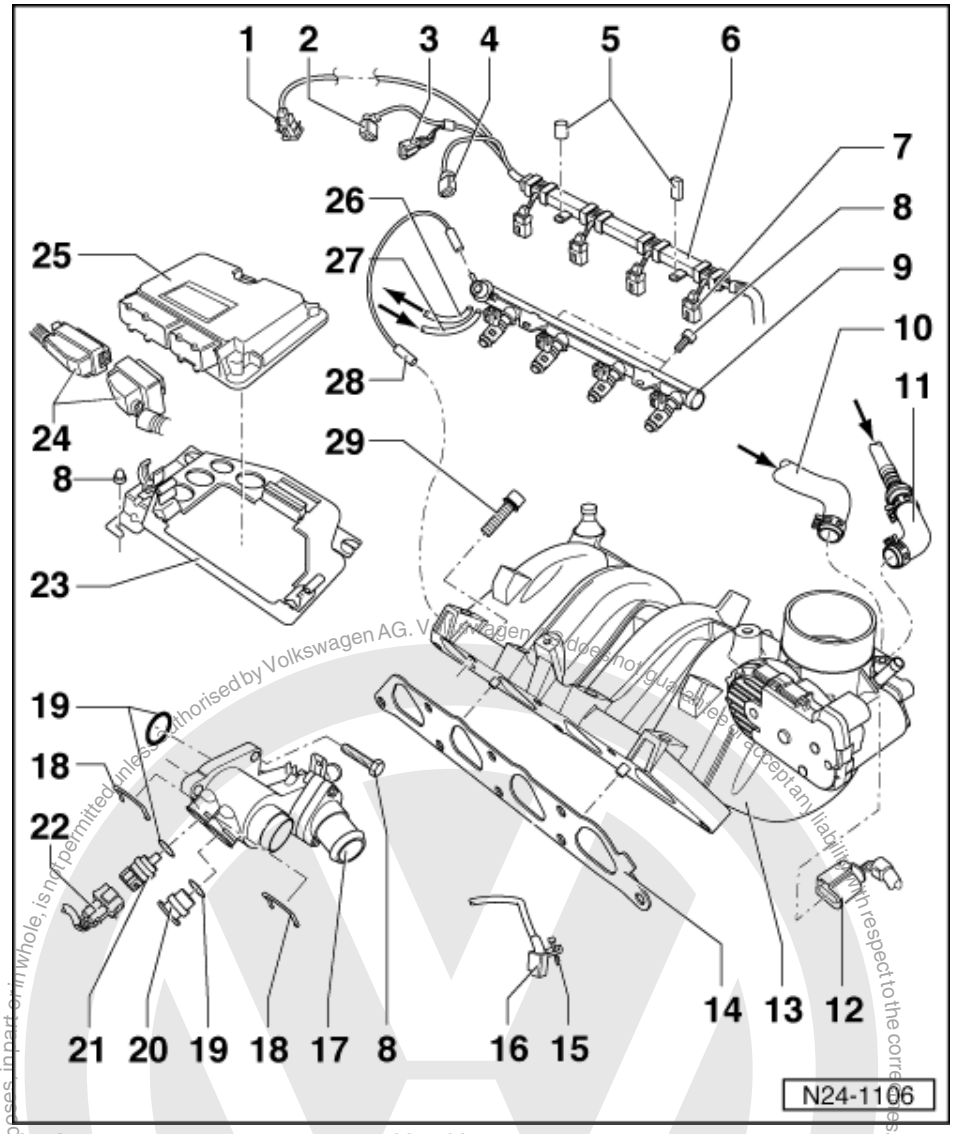

21 Coolant temperature sender (G62)*
- Green
- For engine control unit
- With coolant temperature gauge sender (G2)
- Contacts gold plated
- Checking =>Page 94
- If necessary release pressure in cooling system before removing

22 Connector
- Black, 4-pin
- For coolant temperature sender (G62) and coolant temperature gauge sender (G2)
- Connector contacts are gold-plated

23 Retaining frame
- Fitting location: In plenum chamber

24 Connector
- Only disconnect or connect with ignition switched off

satelettronica

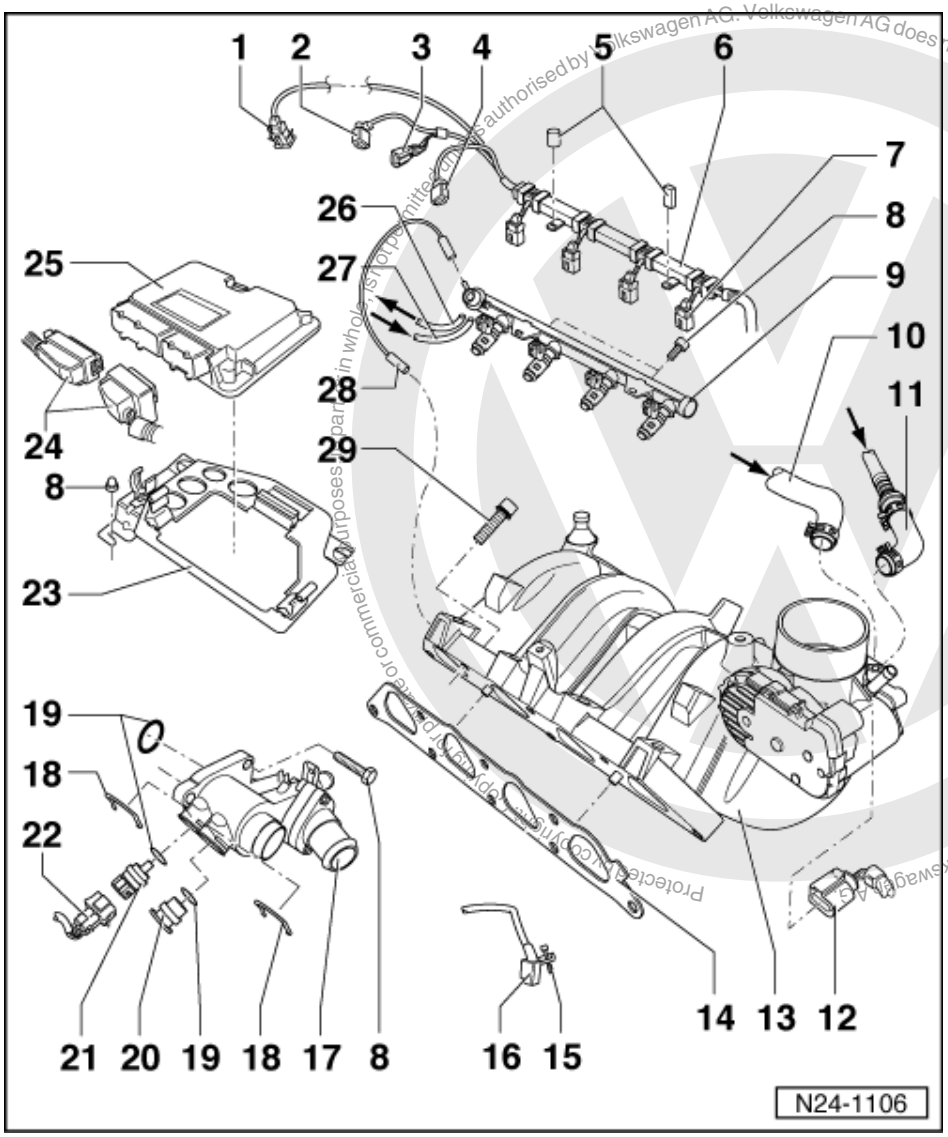

25 Engine control unit*

(Control unit for Simos injection and ignition system -J361)

- Fitting location: In plenum chamber
- For injection system, Lambda regulation, activated charcoal filter solenoid valve, knock control, governed speed, ignition and self-diagnosis
- Checking voltage supply => Page 124
- Renew => Page 126
- When renewing, erase learnt values and adapt engine control unit to throttle valve control part=> Page 128
- On replacement, the control unit must be matched to the electronic immobilizer => Page 130

Volkswagen AG. Volkswagen AG does not guarantee or accept any liability with respect to the correctness of information in this document. Copyright by Volkswagen AG
Protected by copyright. Copying for private or commercial purposes, in whole or in part, is not permitted unless authorised by Volkswagen AG
satelettronica

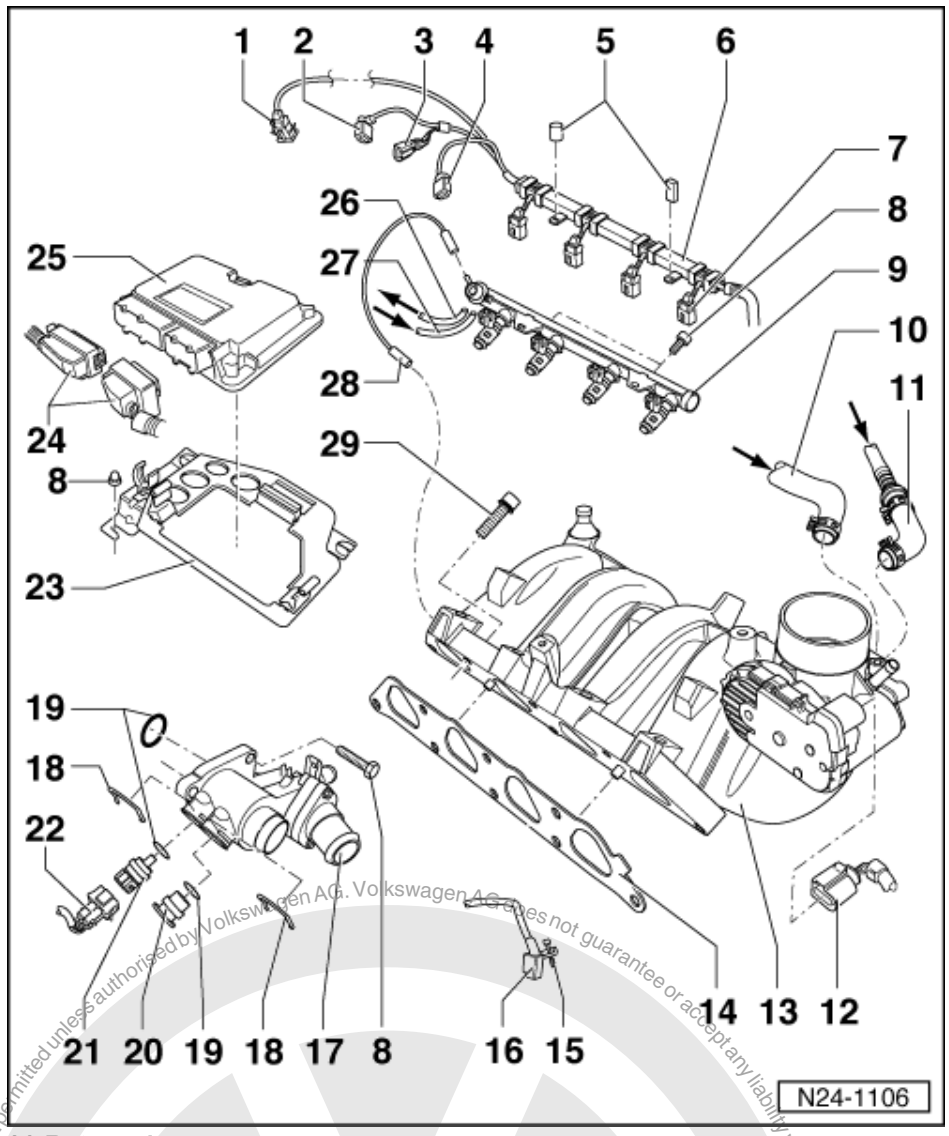

26 Return pipe

- Blue or with blue marking
- Secure with spring-type clips
- Check securely seated
- To the fuel delivery unit in fuel tank

=> Repair Group 20; Removing and installing parts of fuel supply system; Removing and installing fuel tank with attachments and fuel filter Removing and installing parts of fuel supply system Removing and installing fuel tank with attachments and fuel filter

27 Supply pipe/hose

- Black with white marks
- Secure with spring-type clips
- Check securely seated
- From fuel filter:

=> Repair Group 20; Removing and installing parts of fuel supply system; Removing and installing fuel tank with attachments and fuel filter Removing and installing parts of fuel supply system Removing and installing fuel tank with attachments and fuel filter

28 Vacuum hose

29 20 Nm

Protected by copyright. Copyright by Volkswagen AG. Copyright by Volkswagen AG, Volkswagen AG does not guarantee or accept any liability with respect to the correctness of information in this document. Copy or distribute for commercial purposes, in part or in whole, is not permitted unless authorised by Volkswagen AG.
satelettronica

1.5 - Dismantling and assembling intake manifold

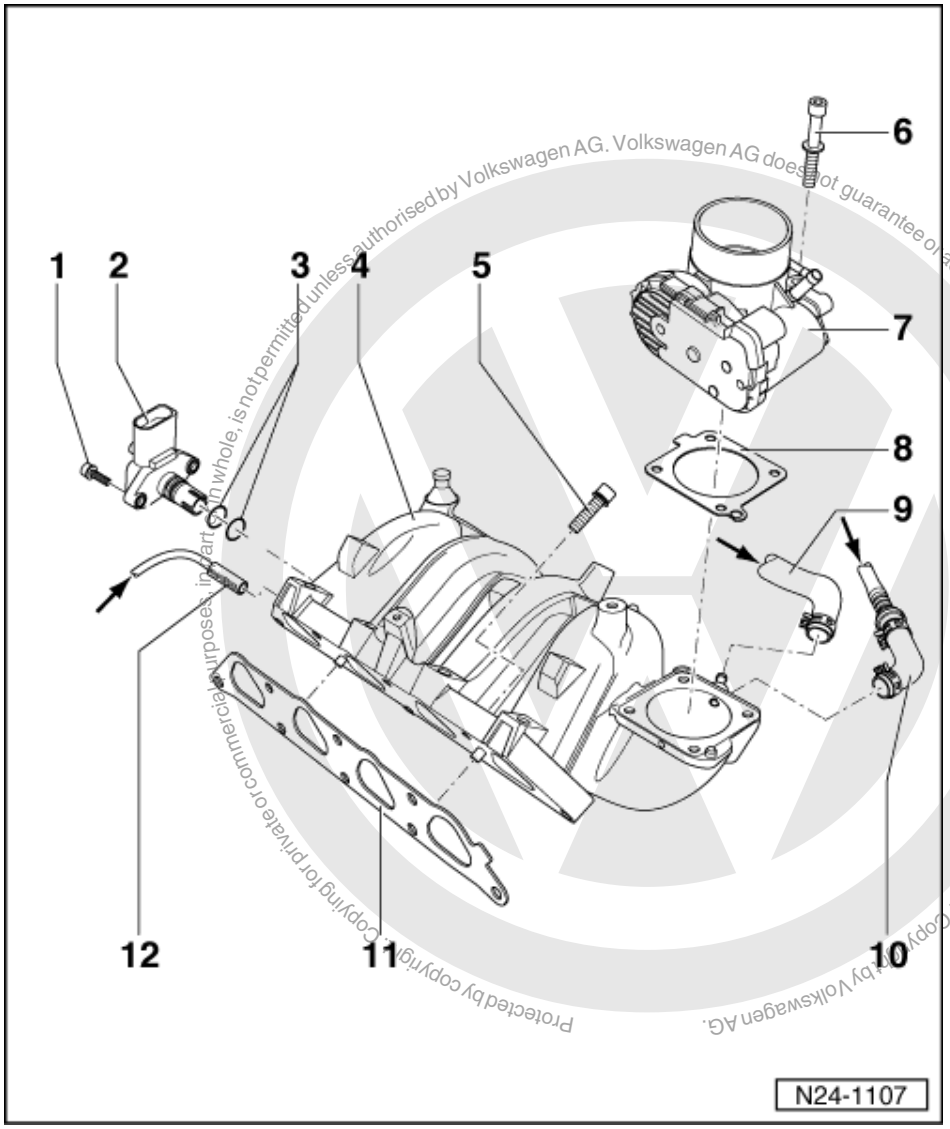

Protected by copyright. Copying for private or commercial purposes, in part or in whole, is not permitted unless authorised by Volkswagen AG. Volkswagen AG does not guarantee or accept any liability with respect to the correctness of information in this document. Copyright by Volkswagen AG.

satelettronica

1 3 Nm
2 Intake manifold pressure sender (G71)* with intake air temperature sender (G42)*
- Checking intake manifold pressure sender
  =>Page 89
- Checking intake air temperature sender =>Page 90
- 4-pin connector
- Contacts gold plated

3 O-ring
- Renew if damaged

4 Intake manifold
- Removing and installing
  =>Page 62 , removing and installing parts of the injection system

5 20 Nm
6 10 Nm

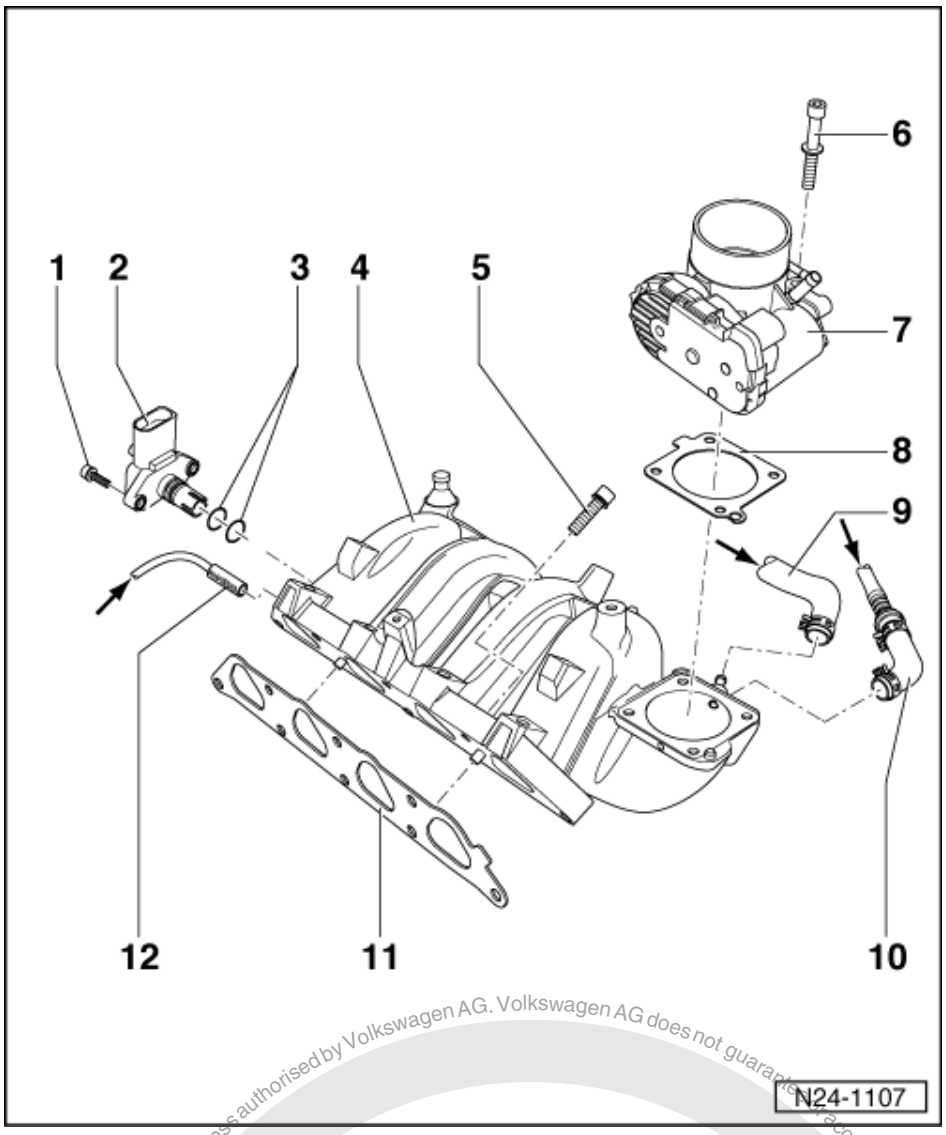

7 Throttle valve control part (J338)*
- No cable disc for accelerator cable as this is an electronic accelerator system
- Checking => Page 85
- When renewing, erase learnt values and adapt engine control unit to throttle valve control part=> Page 128
- 6-pin connector
- Contacts gold plated
- Heated by coolant

8 Gasket
- Renew
- Note fitting position

9 From brake servo
- Secure with spring-type clips

10 From activated charcoal filter solenoid valve (N80)*/**

=> Repair group 20; Activated charcoal filter system Activated charcoal filter system

- Secure with spring-type clips

Protected by copyright. Copying for private or commercial purposes, in part or in whole, is not permitted unless authorised by Volkswagen AG. Volkswagen AG does not guarantee or accept any liability with respect to the correctness of information in this document. Copyright by Volkswagen AG.
satelettronica

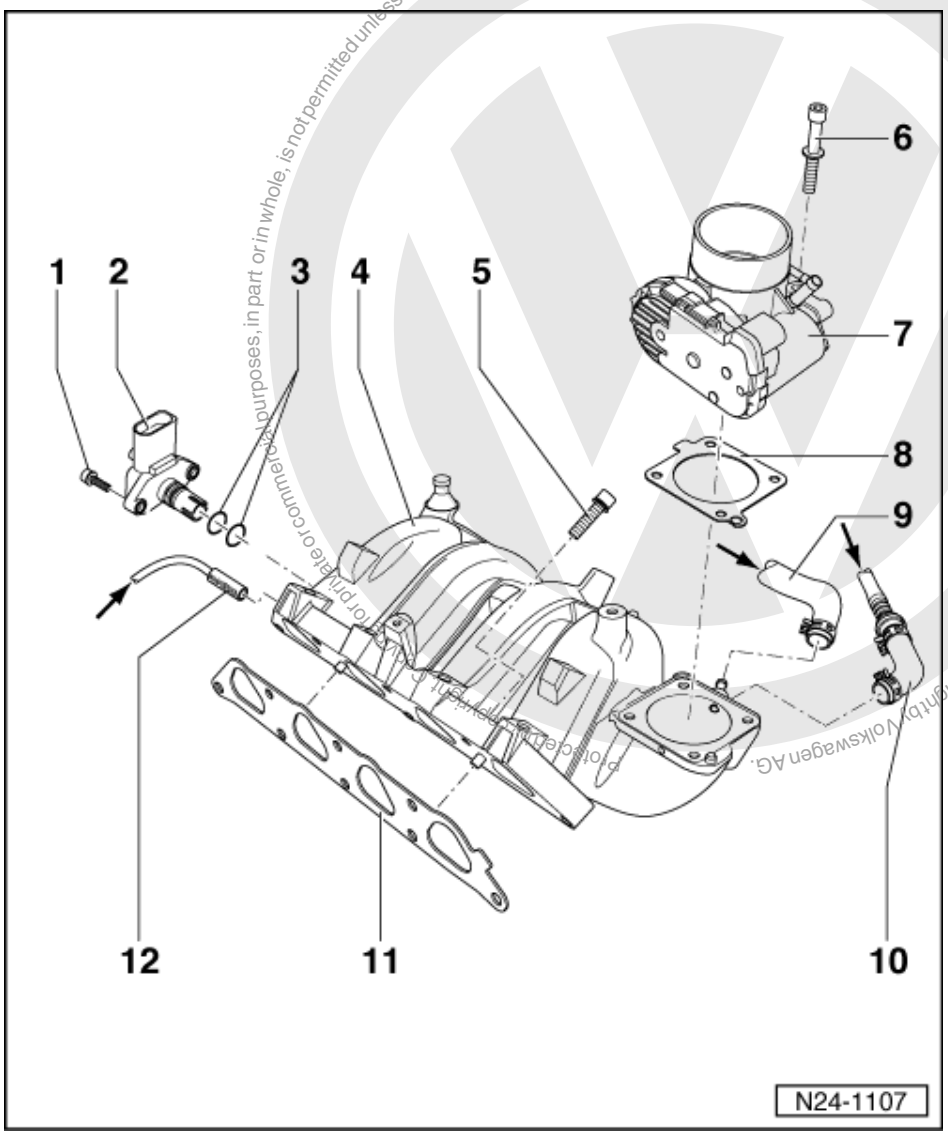

11 Gasket
- Renew

12 Vacuum hose
- From fuel pressure regulator
  => Page 73 , item 12

Volkswagen AG. Volkswagen AG does not guarantee or accept any liability with respect to the correctness of information in this document. Copyright by Volkswagen AG.
Reproduction, in whole or in part, for private or commercial purposes, is not permitted unless authorised by Volkswagen AG.
satelettronica

1.6 - Dismantling and assembling fuel rail with injectors

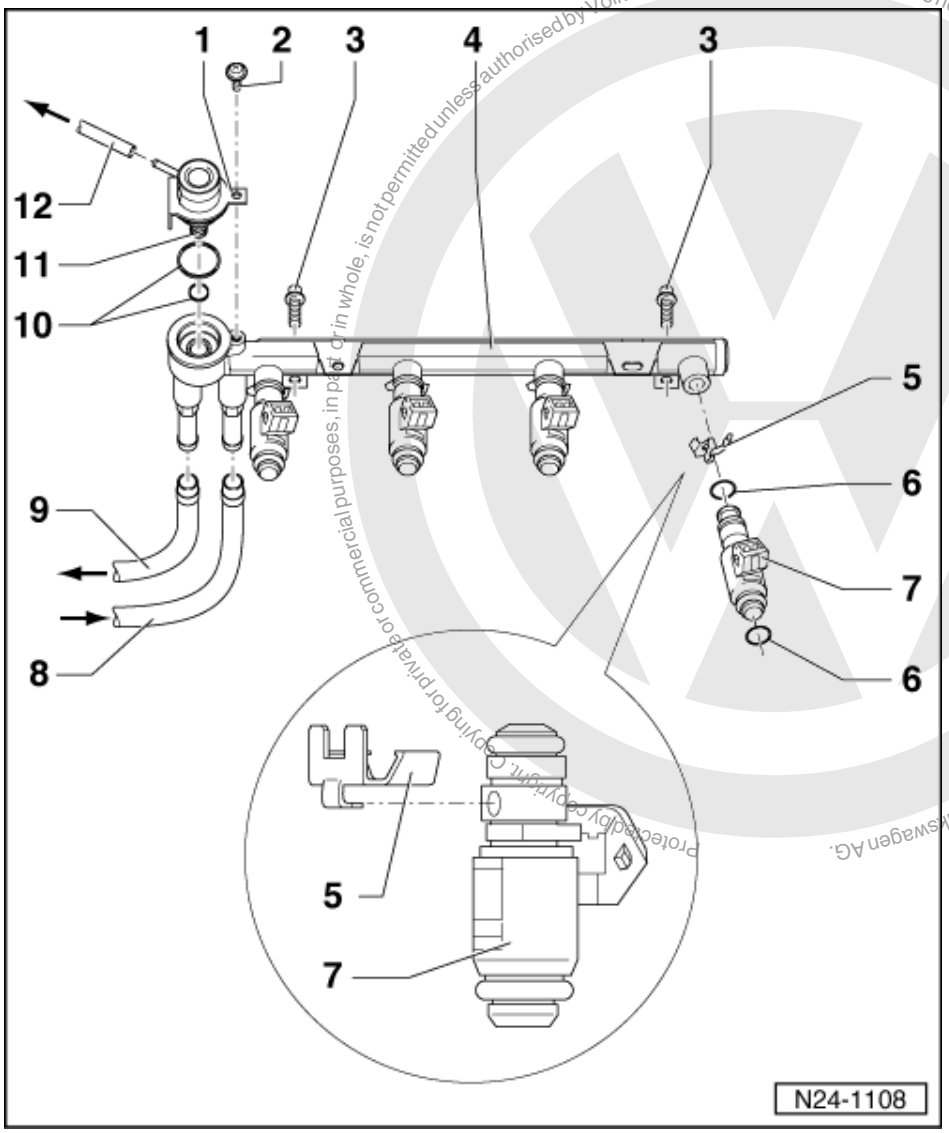

1 Retaining plate
- Note installation position
- Renew if damaged

2 5 Nm

3 10 Nm

4 Fuel rail
- Removing and installing
  =>Page 104 , checking spray pattern and injectors for leaks

5 Retaining clip
- Ensure seated correctly at injector and fuel rail

Protected by copyright. Copying for private or commercial purposes, in part or in whole, is not permitted unless authorised by Volkswagen AG. Volkswagen AG does not guarantee or accept any liability with respect to the correctness of information in this document. Copyright by Volkswagen AG.
satelettronica

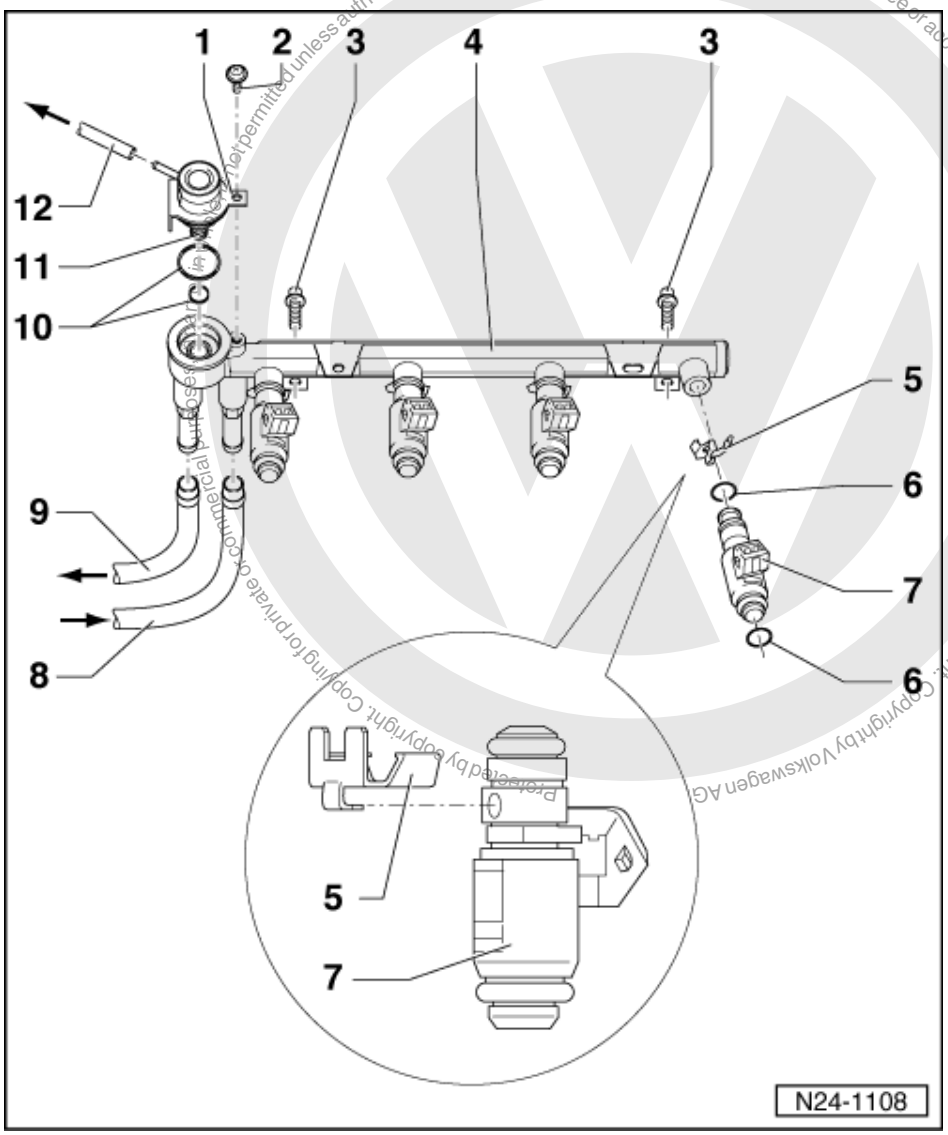

6 O-ring
- Renew
- Before installing moisten with clean engine oil

7 Injectors (N30...N33)*
- Checking => Page 100
- Resistance 12.0...17.0 ω(at room temperature)
- When renewing, erase learnt values and adapt engine control unit to throttle valve control part=> Page 128

8 Supply pipe/hose
- Black with white marks
- Secure with spring-type clips
- Check securely seated
- From fuel filter:

=> Repair Group 20; Removing and installing parts of fuel supply system; Removing and installing fuel tank with attachments and fuel filter Removing and installing parts of fuel supply system Removing and installing fuel tank with attachments and fuel filter

satelettronica

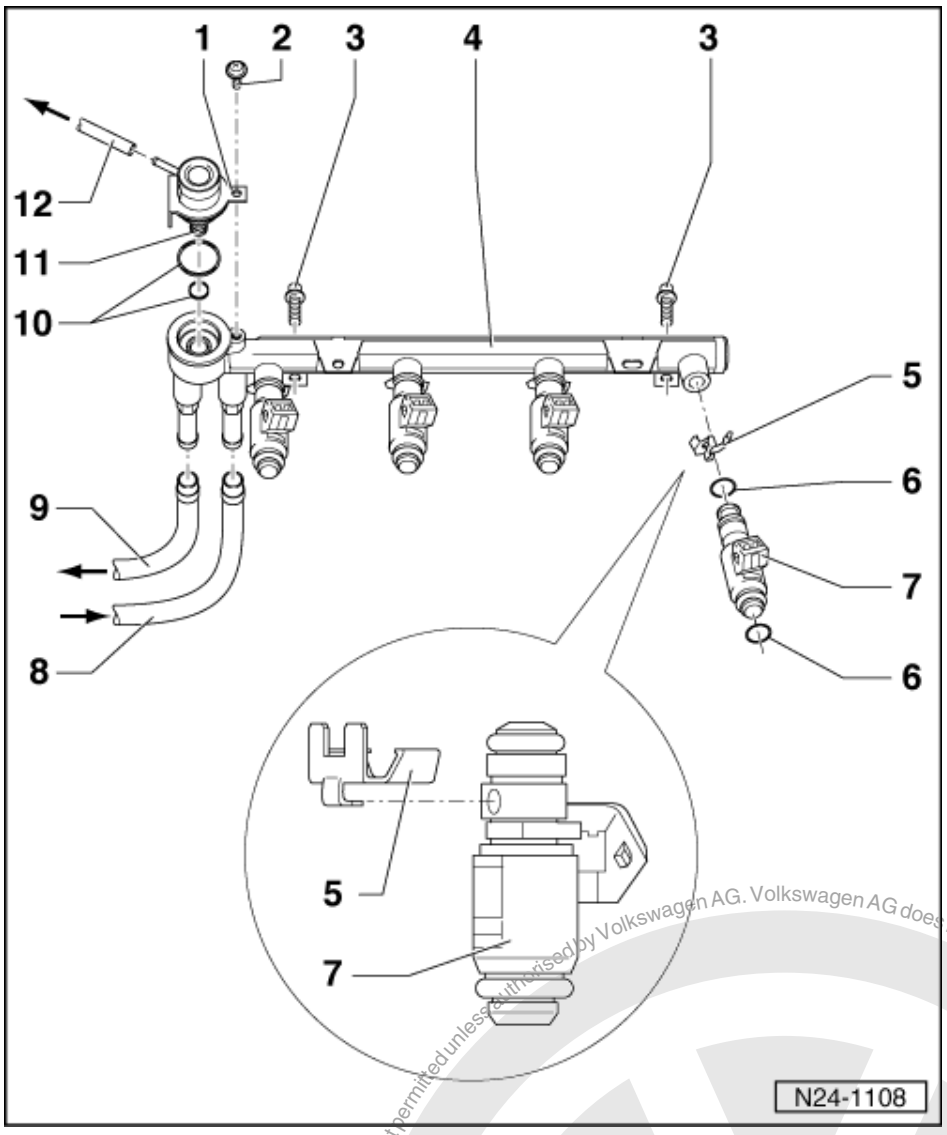

9 Return pipe
- Blue or with blue marking
- Secure with spring-type clips
- Check securely seated
- To the fuel delivery unit in fuel tank

=> Repair Group 20; Removing and installing parts of fuel supply system; Removing and installing fuel tank with attachments and fuel filter Removing and installing parts of fuel supply system Removing and installing fuel tank with attachments and fuel filter

10 O-ring
- Renew if damaged

11 Fuel pressure regulator
- Checking => Page 107 , checking fuel pressure regulator and holding pressure

12 Vacuum hose
- To intake manifold => Page 70 , item 12

Protected by copyright. Copying for private or commercial purposes, in part or in whole, is not permitted unless authorised by Volkswagen AG. Volkswagen AG does not guarantee or accept any liability with respect to the correctness of information in this document. Copyright by Volkswagen AG.
satelettronica

1.7 - Dismantling and assembling air cleaner

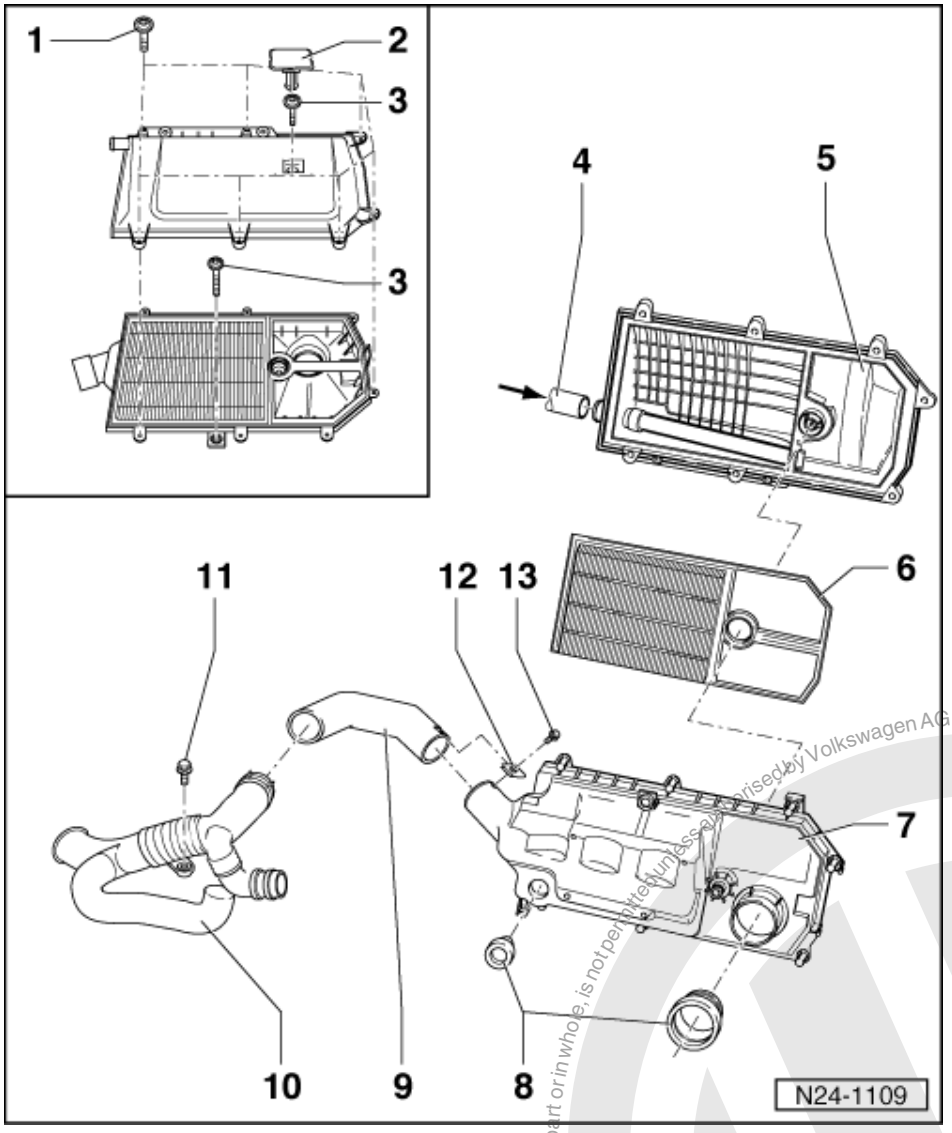

Removing and installing cover over camshaft housing

=> Page 76 , Fig. 1

Removing and installing air cleaner => Page 76 , Fig. 2

1 3.5 Nm
- Observe notes on installing => Page 77

2 Plug

3 4 Nm
- Observe notes on installing => Page 77

4 Crankcase breather hose
- From oil separator:

=> Repair group 17; Removing and installing parts of lubrication system Removing and installing parts of lubrication system

satelettronica
Protected by copyright. Copying for private or commercial purposes, in part or in whole, is not permitted unless authorised by Volkswagen AG. Volkswagen AG does not guarantee or accept any liability with respect to the correctness of information in this document. Copyright by Volkswagen AG.

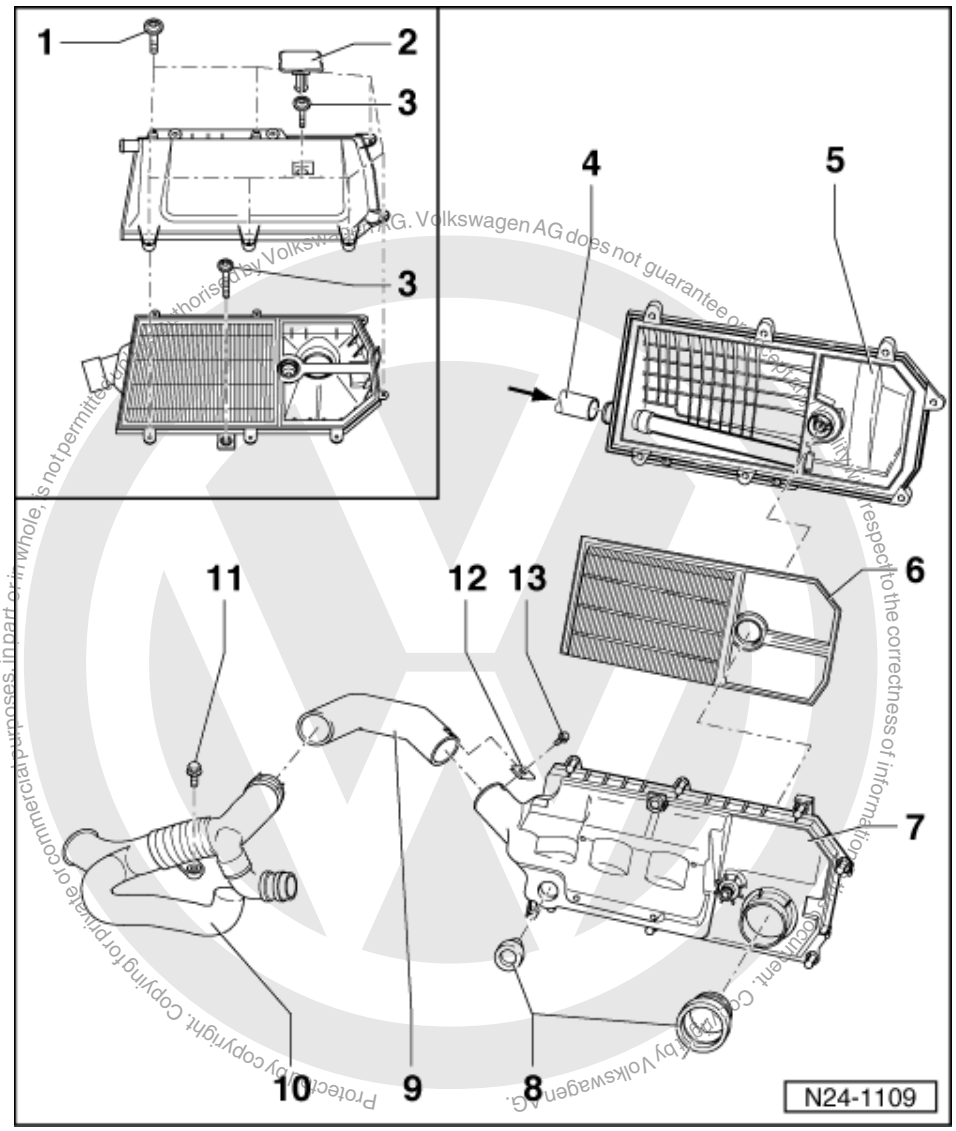

5 Air cleaner upper part
6 Filter element
7 Air cleaner lower part
8 Seal
- Check securely seated
- Renew if damaged

9 Intake manifold
10 Air intake connecting pipe
- For cold and warm air intake

11 5 Nm
12 Securing clip
13 Cross-head screw

satelettronica

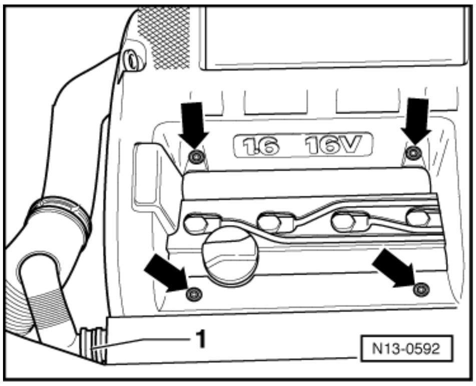

-> Fig. 1 Removing and installing cover over camshaft housing

Removing

- Pull warm air intake pipe -1- off cover.
- Remove securing bolts -arrows- and take cover off.

Installing

Install in reverse order but note following:

- Tighten cover securing bolts to 10 Nm.

.

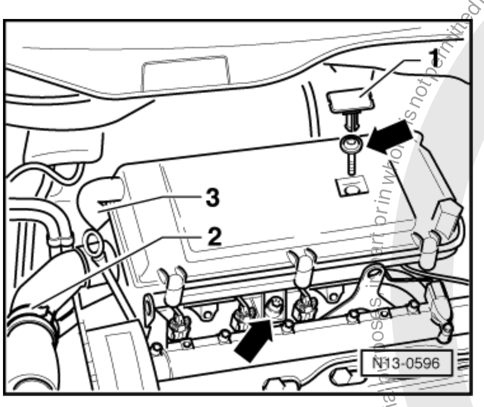

-> Fig. 2 Removing and installing air cleaner

Special tools, workshop equipment, testers, measuring instruments and auxiliary items required

- VAS 5024 Assembly tool for spring-type clips

Removing

- Remove cover over camshaft housing =>Page 76 , Fig. 1 .
- Remove plug -1-.
- Disconnect air intake connecting piece from intake pipe -2- using spring-type clip pliers VAS 5024.
- Pull crankcase breather hose -3- off air cleaner upper part.
- Loosen air cleaner at securing screws marked by arrows.
- Remove air cleaner.

Protected by copyright. Copying for private or commercial purposes, in part or in whole, is not permitted unless authorised by Volkswagen AG. Volkswagen AG does not guarantee or accept any liability with respect to the correctness of information in this document. Copyright by Volkswagen AG.

sateletronica

Installing
- Installing the air cleaner is carried out in the reverse order.

Notes:
- Self-tapping screws/bolts are used to secure the air cleaner upper part to the air cleaner lower part. When the screws/bolts are loosened or tightened using a power tool the threads in the air cleaner lower part may be damaged.
- The tightening torque for the securing screws/bolts securing the air cleaner to the intake manifold must be strictly adhered to.

For this reason the use of a power tool can only be allowed when:
- The power tool maximum speed is 200 rpm.
- The tightening torque can be set exactly:
  - Tighten air cleaner upper part to air cleaner lower part to 3.5 Nm.
  - Tighten air cleaner to intake pipe to 4.0 Nm.

1.8 - Safety precautions

Warning!
Fuel system is under pressure! Before opening the system place a cloth around the connection. Then release pressure by carefully loosening the connection.

To prevent injuries to persons and/or damage to the fuel injection and ignition system, the following must be noted:
- Do not touch or disconnect ignition wiring when the engine is running or being turned at starter speed.
- The ignition must be switched off before connecting or disconnecting injection or ignition system wiring or tester cables.

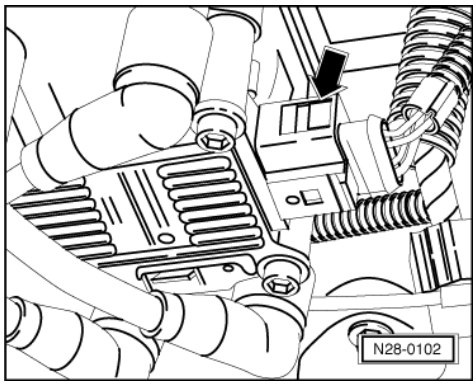

- If the engine is to be turned at starter speed, without starting:

- -> Pull 4 pin connector off ignition transformer (N152) -arrow-.

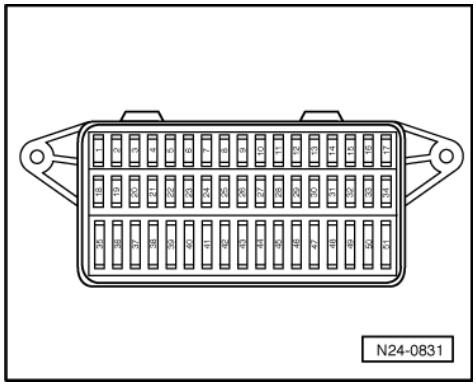

satelettronica

- -> Pull fuel pump fuse No. 40 out of fuse holder.

Observe following if test and measuring instruments are required during a test drive:

- Test and measuring instruments must be secured to rear seat and operated by a 2nd person from this location.

  If test and measuring instruments are operated from front passenger's seat and the vehicle is involved in an accident, there is a possibility that the person sitting in this seat may receive serious injuries when the airbag is triggered.

1.9 - Rules for cleanliness

When working on the fuel supply/injection system, pay careful attention to the following "5 rules":

- Thoroughly clean all unions and the adjacent areas before disconnecting.
- Place parts that have been removed on a clean surface and cover. Do not use fluffy cloths!
- Carefully cover opened components or seal, if the repair cannot be carried out immediately.
- Only install clean components:
  Only unpack replacement parts immediately prior to installation.
  Do not use parts that have been stored loose (e.g. in tool boxes etc.).
- When the system is open:
  Do not work with compressed air if this can be avoided.
  Do not move vehicle unless absolutely necessary.

1.10 - Technical data

Engine code		ARC	AVY
Idling test			
Idling speed1)	rpm	800...9002)	800...9002)
Engine control unit3)			
System designation		SIMOS 3	SIMOS 3
Part number4)		036 906 033A	036 906 033D
Governed speed	rpm	from approx. 6500	from approx. 6500

1) Not adjustable

2) Up-to-date specifications:

=> Exhaust emissions test binder

3) Replacing engine control unit => Page 126

4) For latest part number for engine control unit:

=> Parts microfiche

satelettronica

2 - Checking components

2.1 - Checking components

2.2 - Checking Lambda probe heating for Lambda probe before catalyst

Note:

Only gold-plated contacts must be used to repair the contacts in the Lambda probes connectors.

Special tools, workshop equipment, testers, measuring instruments and auxiliary items required

- Hand multimeter V.A.G 1526 or multimeter V.A.G 1715
- Fault reader V.A.G 1551 (or vehicle system tester V.A.G 1552) with cable V.A.G 1551/3
- Adapter set V.A.G 1594

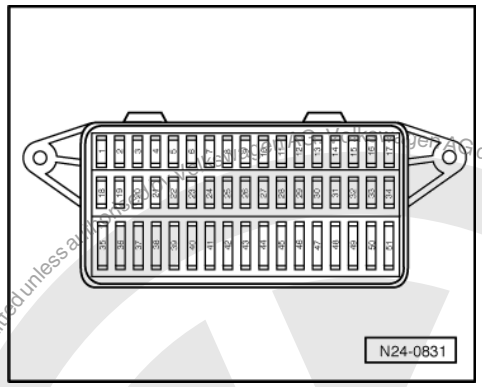

- Test box V.A.G 1598/31
- Current flow diagram

Check conditions

- -> Fuse No. 1 must be OK.
- The battery voltage must be at least 11.5 V.
- Fuel pump relay must be OK
- All electrical consumers, e.g. lights and rear window heating must be switched off.

Test sequence

- Connect fault reader V.A.G 1551 (V.A.G 1552). Start engine and select "Address word" 01 of engine control unit. When doing this the engine must be running at idling speed.
  (Connecting fault reader and selecting engine control unit => Page 4 .)

-> Indicated on display:

```
Rapid data transfer      HELP
Select function XXX
```

- Press keys 0 and 8 for the function "Read measured value block" and confirm entry with Q key.

-> Indicated on display:

```
Read measured value block
Input display group number XXX
```

- Press keys 0, 4 and 1 for "Display group number 41" and confirm entry with Q key.

-> Indicated on display:

satelettronica

(1...4 = Display zones)

```
Read measured value block 41
     1      2      3      4
```

- Check the status of the Lambda probe heating in display zone 2:
  Display: Htg.bC.ON

If the specification is not obtained:

- Press ⇒key.

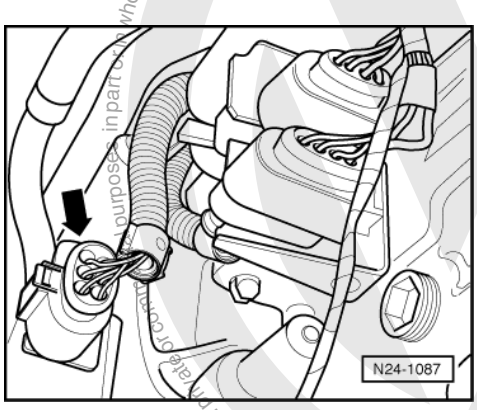

- Press keys 0 and 6 for the function "End output" and confirm entry with the Q key.
- Switch off ignition.
- Remove noise insulation tray.
- -> Separate 6-pin connector (black) to Lambda probe before catalyst (G39) -arrow-.

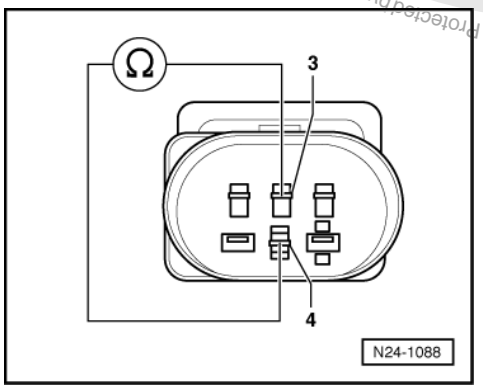

- -> Check resistance for probe heater at Lambda probe connector -1- contacts 3 and 4
  Specification: 2.5...10 ω(at room temperature).

If the specification is not obtained:

- Renew Lambda probe before catalyst (G39)
  =>Page 59 , item 19 .
- Interrogate fault memory, if necessary, repair any faults and then erase fault memory => Page 8 , interrogating and erasing fault memory.
- Erase the learnt values and adapt the engine control unit again=> Page 128 .

If the specification is obtained:

Protected by copyright. Copyright by Volkswagen AG. Volkswagen AG does not guarantee or accept any liability with respect to the correctness of information in this document. Copyright by Volkswagen AG. Unauthorised use or distribution is not permitted. Use only for purposes in part of work shop or for other purposes authorised by Volkswagen AG.
satelettronica

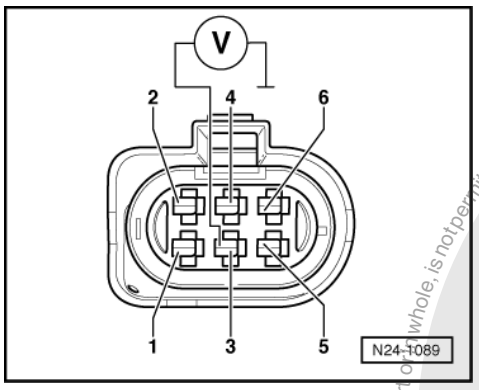

- -> Set multimeter to measure voltage and connect to contact 3 (connector to engine control unit) and earth.
- Start engine and run at idling speed.
- Measure voltage supply and observe the display group 41, display zone 2.
  Display, Htg.bC.ON:
  Specification: 11.0...14.5 V

If the specification is not obtained:

- Switch off ignition.
- Check wire for open circuit between 6-pin connector contact 3 and fuel pump relay (J17) using current flow diagram.
  Wire resistance: max. 1.5 ω

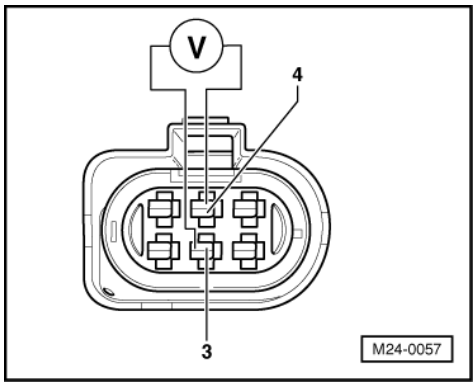

If the specification is obtained:

- -> Connect multimeter to contacts 3 and 4 (connector to engine control unit).

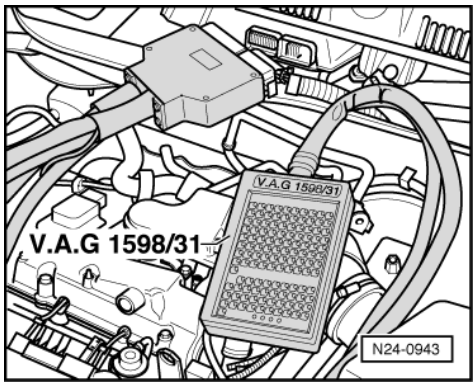

- Check activation from engine control unit and note display group 41, display zone 2.
  Display: Htg.bC.ON:
  Specification: 11.5...14.5 V
- Switch off ignition.

Protected by copyright. Copying for private or commercial purposes, in part or in whole, is not permitted unless authorised by Volkswagen AG. Volkswagen AG does not guarantee or accept any liability with respect to the correctness of information in this document. Copyright by Volkswagen AG.
satelettronica

If the specification is not obtained:

- -> Connect test box V.A.G 1598/31 to control unit wiring harness. The engine control unit remains disconnected.

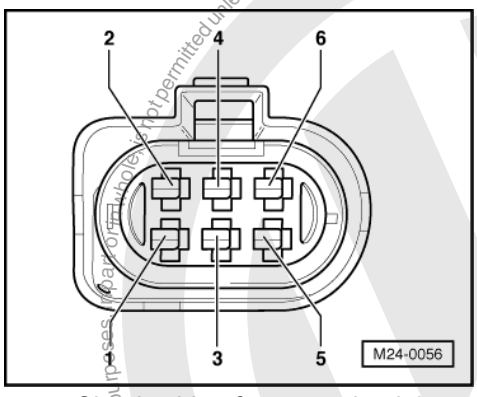

- -> Check wiring for open circuit between test box and 6-pin connector referring to current flow diagram:
  Contact 4 and test box socket 4
  Wire resistance: max. 1.5 ω
- Check wiring additionally for short to vehicle earth or battery positive.
  Specification: ∞ω

If the specification is obtained:

- Replace engine control unit
  => Page 126 .

2.3 - Checking Lambda probe heating for Lambda probe after catalyst

Special tools, workshop equipment, testers, measuring instruments and auxiliary items required

- Hand multimeter V.A.G 1526 or multimeter V.A.G 1715
- Fault reader V.A.G 1551 (or vehicle system tester V.A.G 1552) with cable V.A.G 1551/3
- Adapter set V.A.G 1594
- Test box V.A.G 1598/31
- Current flow diagram

Check conditions

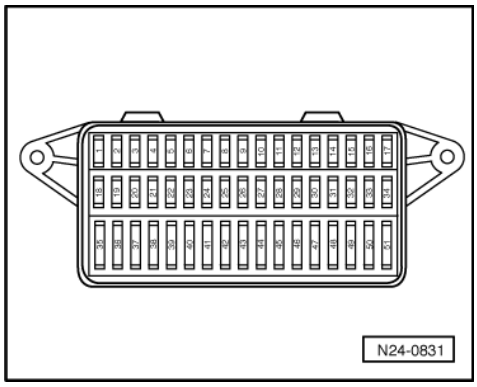

- -> Fuse No. 1 must be OK.
- The battery voltage must be at least 11.5 V.
- Fuel pump relay must be OK
- All electrical consumers, e.g. lights and rear window heating must be switched off.

Protected by copyright. Copyright by Volkswagen AG.
Copyright by Volkswagen AG. Volkswagen AG does not guarantee or accept any liability with respect to the correctness of information in this document. Copying for private or commercial purposes, in part or in whole, is not permitted unless authorised by Volkswagen AG.
satelettronica

Test sequence

- Connect fault reader V.A.G 1551 (V.A.G 1552). Start engine and select "Address word" 01 of engine control unit. When doing this the engine must be running at idling speed.
  (Connecting fault reader and selecting engine control unit => Page 4 .)

-> Indicated on display:

```
Rapid data transfer      HELP
Select function XXX
```

- Press keys 0 and 8 for the function "Read measured value block" and confirm entry with Q key.

-> Indicated on display:

```
Read measured value block
Input display group number XXX
```

- Press keys 0, 4 and 1 for "Display group number 41" and confirm entry with Q key.

-> Indicated on display:
(1...4 = Display zones)

```
Read measured value block 41
     1       2      3      4
```

- Check the status of the Lambda probe heating in display zone 4:
  Display: Htg.aC.ON

If the specification is not obtained:

- Press ⇒key.

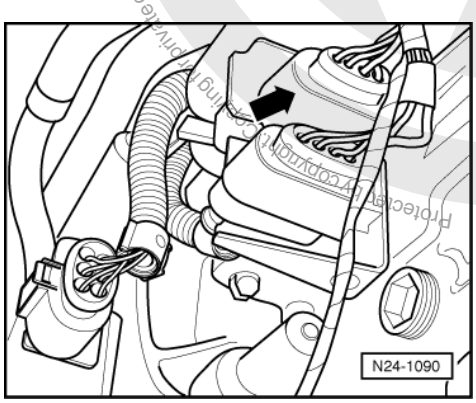

- Press keys 0 and 6 for the function "End output" and confirm entry with the Q key.
- Switch off ignition.
- Remove noise insulation tray.
- -> Separate 4-pin connector (black) to Lambda probe after catalyst (G130) -arrow-.

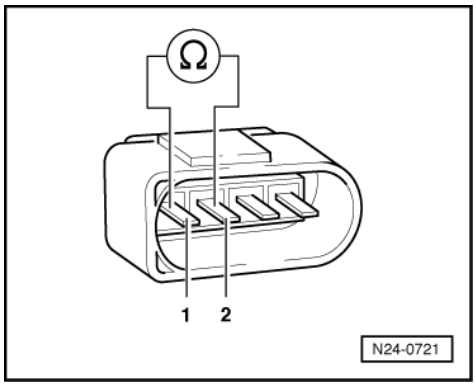

- -> Check resistance for probe heater at Lambda probe connector contacts 1 and 2.

Volkswagen AG. Volkswagen AG does not guarantee or accept any liability with respect to the correctness of information in this document. Copyright by Volkswagen AG.
satelettronica

Specification: 6.4...47.5 ω (at room temperature).

If the specification is not obtained:

- Replace the Lambda probe after catalyst (G130) => Page 55 , item 5 .
- Interrogate fault memory, if necessary, repair any faults and then erase fault memory => Page 8 , interrogating and erasing fault memory.
- Erase the learnt values and adapt the engine control unit again=> Page 128 .

If the specification is obtained:

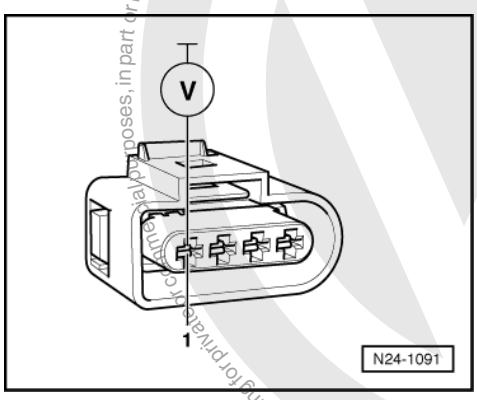

- -> Set multimeter to measure voltage and connect to contact 1 (connector to engine control unit) and earth.
- Start engine and run at idling speed.
- Measure voltage supply and observe the display group 41, display zone 4.
  Display, Htg.aC.ON:
  Specification: 11.0...14.5 V

If the specification is not obtained:

- Switch off ignition.

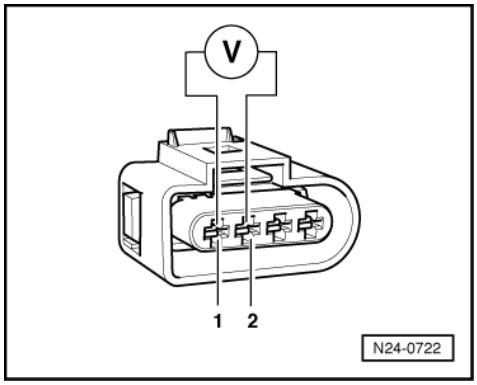

- Check wire for open circuit between 4-pin connector contact 1 and fuel pump relay (J17) referring to current flow diagram.
  Wire resistance: max. 1.5 ω

If the specification is obtained:

- -> Connect multimeter to contacts 1 and 2 (connector to engine control unit).

satelettronica

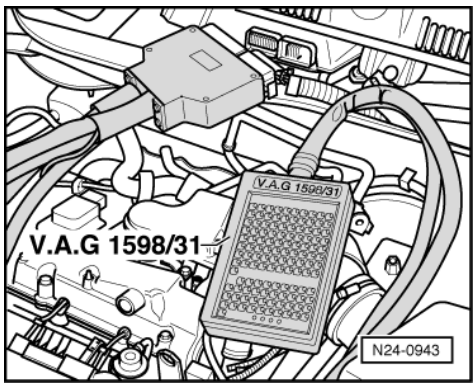

- Check activation from engine control unit and note display group 41, display zone 4.
  Display Htg.aC.ON:
  Specification: 11.5...14.5 V
- Switch off ignition.

If the specification is not obtained:

- -> Connect test box V.A.G 1598/31 to control unit wiring harness. The engine control unit remains disconnected.

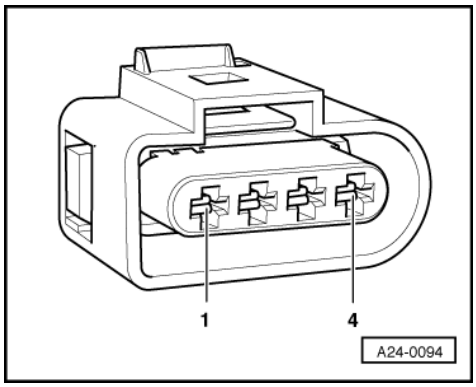

- -> Check wiring for open circuit between test box and 4-pin connector referring to current flow diagram:
  Contact 2 and test box socket 5
  Wire resistance: max. 1.5 ω
- Check wiring additionally for short to vehicle earth or battery positive.
  Specification: ∞ω

If the specification is obtained:

- Replace engine control unit
  => Page 126 .

2.4 - Checking throttle valve control part

Components of throttle valve control part (J338):
Throttle valve drive (G186), angle sender 1 for throttle valve drive (G187) and angle sender 2 for throttle valve drive (G188).

Notes:

- Only gold-plated contacts may be used when servicing the throttle valve control part connector contacts.

If the throttle valve control part is replaced, the following must be carried out:

- Erase learnt values and adapt engine control unit to the throttle valve control part => Page 128 .

Copyright by Volkswagen AG. Volkswagen AG does not guarantee or accept any liability with respect to the correctness of information in this document. Copyright by Volkswagen AG. Protected by copyright. Copying for private or commercial purposes, in part or in whole, is not permitted unless authorised by Volkswagen AG.
satelettronica

Copyright by Volkswagen AG. Volkswagen AG does not guarantee or accept any liability with respect to the correctness of information in this document. Copying for private or commercial purposes, in part or in whole, is not permitted unless authorised by Volkswagen AG.

Special tools, workshop equipment, testers, measuring instruments and auxiliary items required

- Hand multimeter V.A.G 1526 or multimeter V.A.G 1715
- Fault reader V.A.G 1551 (or vehicle system tester V.A.G 1552) with cable V.A.G 1551/3
- Adapter set V.A.G 1594
- Test box V.A.G 1598/31
- Current flow diagram

Check conditions

- The battery voltage must be at least 11.5 V.
- All electrical consumers, e.g. lights and rear window heating must be switched off.
- If the vehicle is equipped with an air conditioning system, this must be switched off.
- Coolant temperature must be at least 80 °C, =>display group 04, display zone 3.

Test sequence

- Connect the fault reader V.A.G 1551 (V.A.G 1552). Then switch ignition on and select engine control unit with the "Address word" 01.
  (Connecting fault reader and selecting engine control unit => Page 4 .)

-> Indicated on display:

```
Rapid data transfer      HELP
Select function XXX
```

- Press keys 0 and 8 for the function "Read measured value block" and confirm entry with Q key.

-> Indicated on display:

```
Read measured value block
Input display group number XXX
```

- Press keys 0, 6 and 2 for the "Display group number 62" and confirm entry with Q key.

-> Indicated on display:
(1...4 = Display zones)

```
Read measured value block 62
     1     2     3     4
```

- Check throttle valve angle sender 1 (G187) at idling speed limit stop in display zone 1
  Specification: 0.0...100.0 %
- Check throttle valve angle sender 2 (G188) at idling speed limit stop in display zone 2
  Specification: 100.0...0.0 %
- Depress accelerator slowly to full throttle position and observe angles displayed in display zones 1 and 2:

  The percentage in display zone 1 must rise evenly.
  The tolerance range 0.0...100.0 % is never used completely.
  The percentage in display zone 2 must fall evenly.
  The tolerance range 100.0...0.0 % is never used completely.

Notes:

- The reason why the display in display zone 1 increases and the display in display zone 2 decreases is because the potentiometers (angle senders) in the throttle valve control part run in opposite directions.

- This means that the voltage of one angle sender moves towards 5 volts. (The more the throttle valve is opened the higher the voltage; percentage figure increases).
- Whilst the voltage of angle sender 2 decreases from 5 volts towards 0 volts. (The more the throttle valve is opened the lower the voltage; percentage figure decreases).

- Press ⇒key.
- Press keys 0 and 6 for the function "End output" and confirm entry with the Q key.

satelettronica

- Switch off ignition.

If the displays do not indicate as described:

- Remove air cleaner => Page 76 , Fig. 2 .

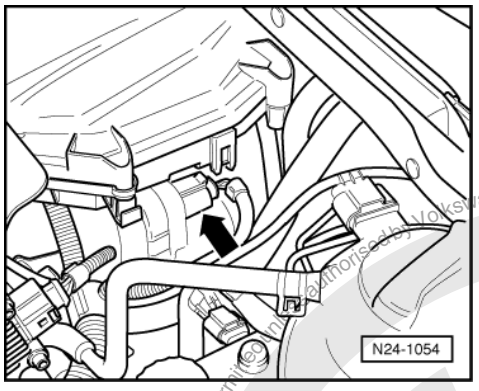

- -> Pull 6-pin connector off throttle valve control part -arrow-.

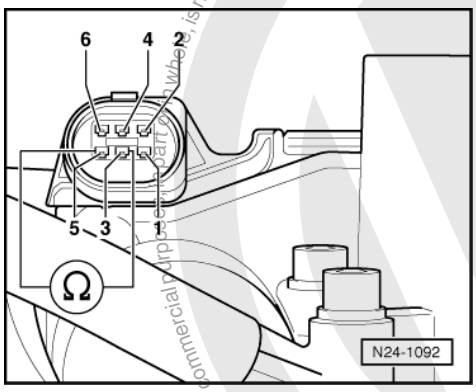

- -> Measure the resistance on throttle valve control part between the contacts 3 + 5
  Specification: 1.0...5.0 ω(at room temperature)

If the specification is not obtained:

- Replace throttle valve control part
  => Page 69 , item 7 .
- Interrogate fault memory, if necessary, repair any faults and then erase fault memory => Page 8 , interrogating and erasing fault memory.
- Erase the learnt values and adapt the engine control unit again=> Page 128 .

If the specification is obtained:

- Check voltage supply of throttle valve control part and wiring to control unit => Page 88 .
- Check the accelerator pedal position sender.

=> Repair group 20; Electronic engine output regulation (electronic accelerator (EPC)); Checking accelerator pedal position sender Electronic engine output regulation (electronic accelerator (EPC)) Checking accelerator pedal position sender

If the voltage supply and wiring is OK:

- Replace engine control unit
  => Page 126 .

Protected by copyright. Copyright by Volkswagen AG. Volkswagen AG does not guarantee or accept any liability with respect to the correctness of information in this document. Copyright by Volkswagen AG.
satelettronica

Checking voltage supply and wiring to control unit

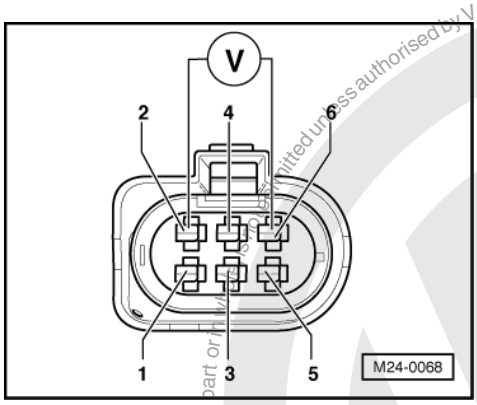

- -> Connect multimeter to measure voltage at connector contacts 2 (positive) + 6 (earth).
- Switch on ignition.
  Specification: min. 4.5 V
- Switch off ignition.

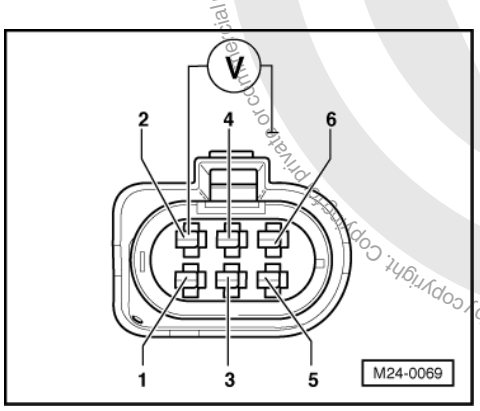

- -> Connect multimeter to measure voltage at connector contact 2 (positive) and earth.
- Switch on ignition.
  Specification: min. 4.5 V
- Switch off ignition.

If the specifications are not attained:

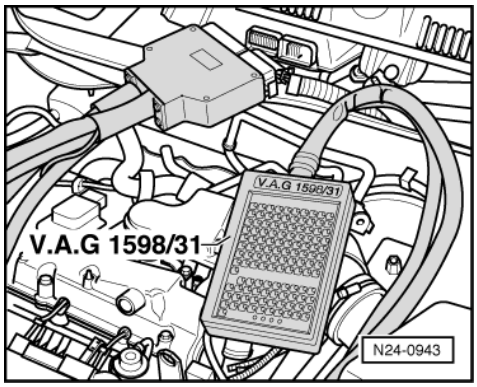

- -> Connect test box V.A.G 1598/31 to control unit wiring harness. The engine control unit remains disconnected.

Protected by copyright. Copyright by Volkswagen AG.
Volkswagen AG does not guarantee or accept any liability with respect to the correctness of information in this document.
satelettronica

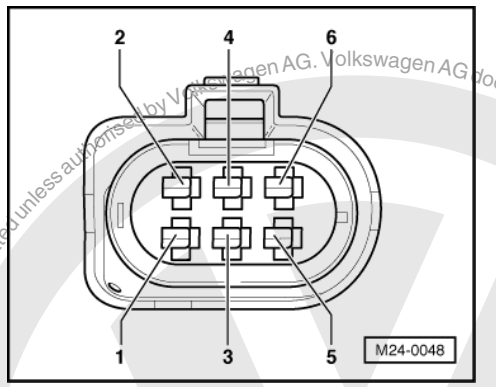

- -> Check wiring for open circuit between test box and connector referring to current flow diagram:
  Contact 1 and test box socket 90
  Contact 2 and test box socket 97
  Contact 3 and test box socket119
  Contact 4 and test box socket 92
  Contact 5 and test box socket121
  Contact 6 and test box socket 91
  Wire resistance: max. 1.5 ω
- Additionally check wires for short to one another, to vehicle earth and to battery positive.
  Specification: ∞ω

If no fault is detected in the wiring:

- Check engine control unit voltage supply => Page 124 .

2.5 - Checking intake manifold pressure sender

Note:

Only gold-plated contacts may be used when servicing the sender connector contacts

Special tools, workshop equipment, testers, measuring instruments and auxiliary items required

- Hand multimeter V.A.G 1526 or multimeter V.A.G 1715
- Adapter set V.A.G 1594
- Test box V.A.G 1598/31
- Current flow diagram

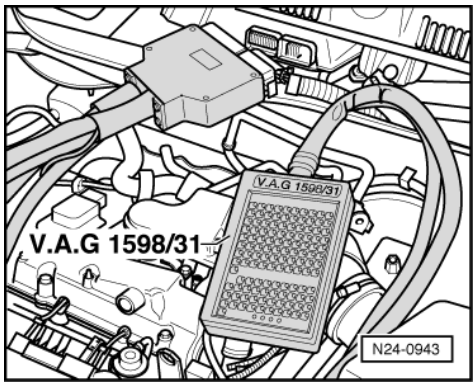

Test sequence

- -> Connect test box V.A.G 1598/31 to control unit wiring harness. The engine control unit remains disconnected.

Protected by copyright. Copyright by Volkswagen AG. Volkswagen AG does not guarantee or accept any liability with respect to the correctness of information in this document. Copying for private or commercial purposes, in part or in whole, is not permitted unless authorised by Volkswagen AG.
satelettronica

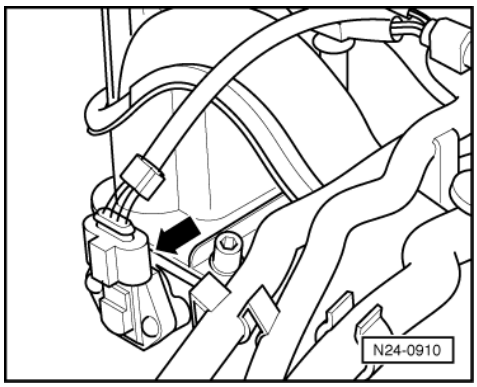

- -> Pull 4-pin connector off intake manifold pressure sender (G71) and intake air temperature sender (G42) -arrow-.

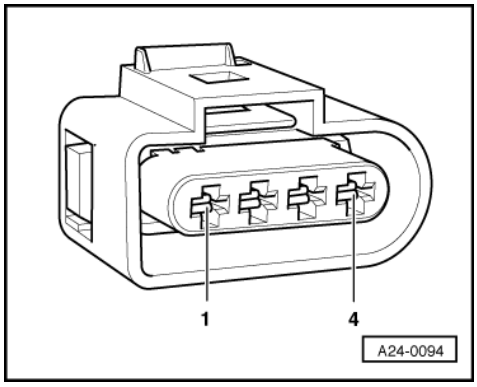

- -> Check wiring for open circuit between test box and 4-pin connector referring to current flow diagram:
  Contact 3 and test box socket 96
  Contact 4 and test box socket 95
  Wire resistance: max. 1.5 ω
- Additionally check wires for short to one another, to vehicle earth and to battery positive.
  Specification: ∞ω

If no fault is detected in the wiring:

- Remove air cleaner => Page 76 , Fig. 2 .
- Renew the intake manifold pressure sender (G71) with intake air temperature sender (G42) => Page 68 , item 2 .
- Interrogate fault memory, if necessary, repair any faults and then erase fault memory => Page 8 , interrogating and erasing fault memory.
- Erase the learnt values and adapt the engine control unit again=> Page 128 .

2.6 - Checking intake air temperature sender

Note:

Only gold-plated contacts may be used when servicing the sender connector contacts

Special tools, workshop equipment, testers, measuring instruments and auxiliary items required

- Hand multimeter V.A.G 1526 or multimeter V.A.G 1715
- Fault reader V.A.G 1551 (or vehicle system tester V.A.G 1552) with cable V.A.G 1551/3
- Adapter set V.A.G 1594
- Test box V.A.G 1598/31
- Current flow diagram
- Chilling spray (commercially available)

Protected by copyright. Copying for private or commercial purposes, in part or in whole, is not permitted unless authorised by Volkswagen AG. Volkswagen AG does not guarantee or accept any liability with respect to the correctness of information in this document. Copyright by Volkswagen AG.
satelettronica

Test sequence

- Connect the fault reader V.A.G 1551 (V.A.G 1552). Then switch ignition on and select engine control unit with the "Address word" 01.
  (Connecting fault reader and selecting engine control unit => Page 4 .)

-> Indicated on display:

```
Rapid data transfer      HELP
Select function XXX
```

- Press keys 0 and 8 for the function "Read measured value block" and confirm entry with Q key.

-> Indicated on display:

```
Read measured value block
Input display group number XXX
```

- Press keys 0, 0 and 4 for "Display group number 4" and confirm entry with Q key.

-> Indicated on display:
(1...4 = Display zones)

```
Read measured value block 4
     1      2      3      4
```

- Observe intake air temperature value in display zone 4 for at least 10 seconds:
  Specification: approx. ambient temperature

If the specification is not obtained:

- Perform check according to following table:

Appears on display	Possible fault cause	Fault elimination
Above ambient temperature1)	---	Only when a sporadic fault is detected: When display is higher than ambient temperature, continue with checks => Page 91
Constant 9.0 °C or 30.0 °C2)	- Wiring open circuit or short to positive or earth in wiring - Intake air temperature sender (G42) defective	- When display is 9.0 °C or 30.0 °C continue with checks => Page 92

1) When a temperature is displayed which is less than ambient temperature sender, first check sender wiring for transfer resistance. Remember the sender can be affected by radiated heat when the vehicle is stationary.

2) If the engine control unit detects a fault with the intake air temperature sender then after a short delay either a constant 9.0 °C or 30.0 °C will be displayed depending if the coolant temperature was above or below 70.0 °C. For an open circuit in the wiring (∞ω)-48.0 °C will be displayed for example first. After 10 seconds the display will change to 9.0 °C or 30.0 °C.

Continuation of check when display equals ambient temperature:

Functional check of sender

- Remove air cleaner => Page 76 , Fig. 2 .

Copyright by Volkswagen AG. Volkswagen AG does not guarantee or accept any liability with respect to the correctness of information in this document. Copyright by Volkswagen AG. Reproduction, in part or in whole, not permitted unless authorised by Volkswagen AG. Copying for private or commercial purposes, in part or in whole, not permitted unless authorised by Volkswagen AG.
satelettronica

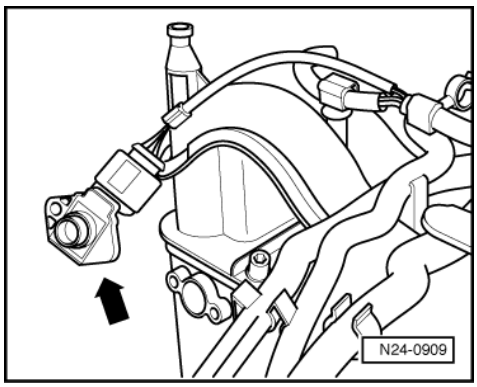

- -> Remove intake air temperature sender together with intake manifold pressure sender (connector remains connected).
- Note intake air temperature value in display zone 4.
- Spray sender -arrow- with commercial chilling agent whilst observing the temperature value. The temperature value must
  decrease.
- Press ⇒key.
- Press keys 0 and 6 for the function "End output" and confirm entry with the Q key.
- Switch off ignition.

If the specification is not obtained:

- Renew the intake manifold pressure sender (G71) with intake air temperature sender (G42) => Page 68 , item 2 .
- Interrogate fault memory, if necessary, repair any faults and then erase fault memory => Page 8 , interrogating and erasing fault memory.
- Erase the learnt values and adapt the engine control unit again=> Page 128 .

Continuation of check when 9 °C or 30 °C is displayed:

- Press ⇒key.
- Press keys 0 and 6 for the function "End output" and confirm entry with the Q key.
- Switch off ignition.

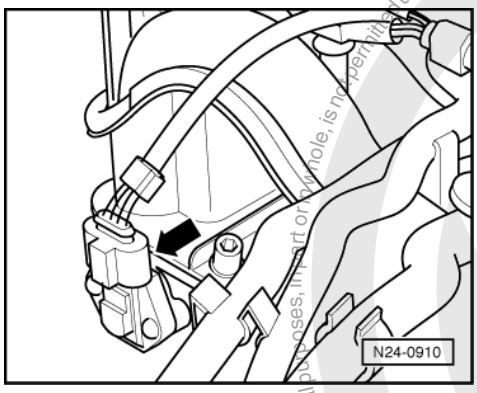

- -> Pull 4 pin connector off intake air temperature sender (G42) with intake manifold pressure sender (G71) -arrow-.

satelettronica
Protected by copyright. Copying for private or commercial purposes, in part or in whole, is not permitted unless authorised by Volkswagen AG. Volkswagen AG does not guarantee or accept any liability with respect to the correctness of information in this document. Copyright by Volkswagen AG.

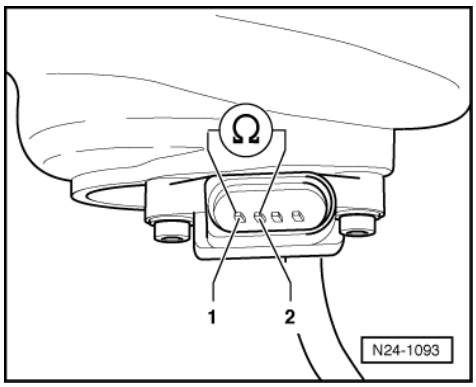

- -> Measure resistance of intake air temperature sender between contacts 1 (earth) and 2 (signal).

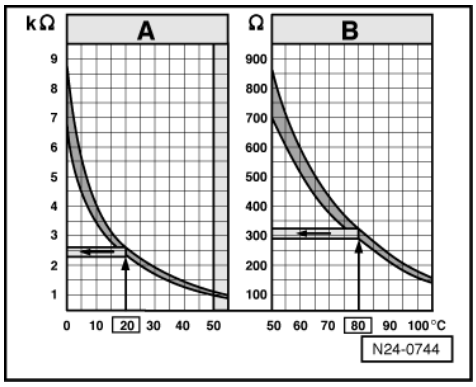

-> Specification see diagram

The diagram is divided into two temperature ranges:

A - From 0...50 °C
B - From 50...105 °C

Examples:

- 20 °C is in range A and corresponds to a resistance of 2.3...2.6 kω
- 80 °C is in range B and corresponds to a resistance of 290...330 ω

If the specification is not obtained:

- Remove air cleaner => Page 76 , Fig. 2 .
- Renew the intake manifold pressure sender (G71) with intake air temperature sender (G42) => Page 68 , item 2 .
- Interrogate fault memory, if necessary, repair any faults and then erase fault memory => Page 8 , interrogating and erasing fault memory.
- Erase the learnt values and adapt the engine control unit again=> Page 128 .

If the specification is obtained:

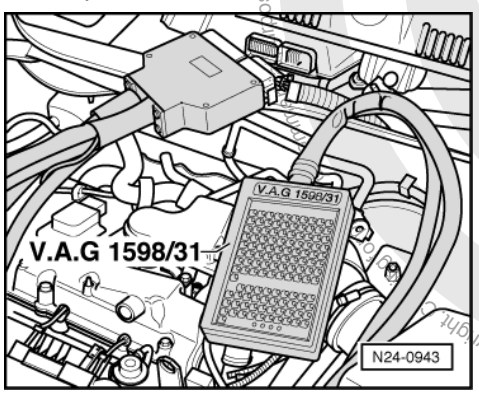

Protected by copyright. Copyright by Volkswagen AG. Volkswagen AG does not guarantee or accept any liability with respect to the correctness of information in this document. Copyright by Volkswagen AG. Reproduction, in whole or in part, is not permitted unless authorised by Volkswagen AG.
satelettronica

- -> Connect test box V.A.G 1598/31 to control unit wiring harness. The engine control unit remains disconnected.

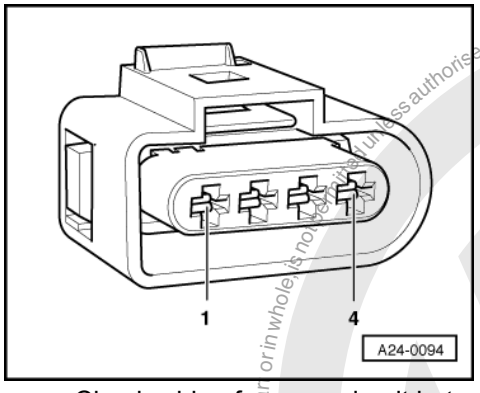

- -> Check wiring for open circuit between test box and 4-pin connector referring to current flow diagram.
  Contact 1 and test box socket 83
  Contact 2 and test box socket 93
  Wire resistance: max. 1.5 ω
- Additionally check wires for short to one another, to vehicle earth and to battery positive.
  Specification: ∞ω

If there is no fault in the wiring and the resistance measurement values are OK.:

- Replace engine control unit
  => Page 126 .

2.7 - Checking coolant temperature sender

Note:

Only gold-plated contacts may be used when servicing the sender connector contacts

Special tools, workshop equipment, testers, measuring instruments and auxiliary items required

- Hand multimeter V.A.G 1526 or multimeter V.A.G 1715
- Fault reader V.A.G 1551 (or vehicle system tester V.A.G 1552) with cable V.A.G 1551/3
- Adapter set V.A.G 1594
- Test box V.A.G 1598/31
- Current flow diagram

Test conditions

- Engine must be cold.

Test sequence

- Connect the fault reader V.A.G 1551 (V.A.G 1552). Then switch ignition on and select engine control unit with the "Address word" 01.
  (Connecting fault reader and selecting engine control unit => Page 4 .)

-> Indicated on display:

```
Rapid data transfer      HELP
Select function XXX
```

- Press keys 0 and 8 for the function "Read measured value block" and confirm entry with Q key.

-> Indicated on display:

Protected by copyright. Copying for private or commercial purposes, in part or in whole is not permitted unless authorised by Volkswagen AG. Volkswagen AG does not guarantee or accept any liability with respect to the correctness of information in this document. Copyright by Volkswagen AG.
satelettronica

```
Read measured value block
Input display group number XXX
```

- Press keys 0, 0 and 4 for "Display group number 4" and confirm entry with Q key.

-> Indicated on display:
(1...4 = Display zones)

```
Read measured value block 4
     1     2     3     4
```

- Read off coolant temperature value in display zone 3.
  Specification: approx. coolant temperature

If the specification is not obtained:

- Perform check according to following table:

Appears on display	Possible fault cause	Fault elimination
Approx. coolant temperature1)	---	Only when a sporadic fault is detected: When display is coolant temperature, continue with checks => Page 95 2)
Constant 30.0 °C or 49.5 °C3)	- Wiring open circuit or short to positive or earth - Coolant temperature sender (G62) defective	- When display is 30.0 °C or 49.5 °C, continue with checks => Page 96

1) When a temperature is displayed which deviates greatly from coolant temperature, first check sender wiring for transfer resistance.

2) Check only possible when engine is cold.

3) If the engine control unit detects a fault with coolant temperature sender (G62), when ignition is on, substitute value (30.0 °Cor 49.5 °C) depending if the intake air temperature is (above or below approx. 20 °C). A model sequence (continued temperature increase at preset intervals) which is stored in the engine control unit is used to start. Thus, the fault reader temperature display rises even though the connector for G62 is disconnected.

Continuation of check when display = coolant temperature:

Test conditions

- Engine must be cold.

Functional check of sender

- Start engine and run at idling speed.

```
Read measured value block 4
     1     2     3     4
```

-> Observe coolant temperature value in display zone 2, whilst engine is running. The temperature figure must
increase uniformly.

Protected by copyright. Copyright by Volkswagen AG. Volkswagen AG does not guarantee or accept any liability with respect to the correctness of information in this document. Copyright by Volkswagen AG. Protected by copyright. Copyright by Volkswagen AG. Reproduction, in part or in whole, is not permitted unless authorised by Volkswagen AG. Volkswagen AG does not guarantee or accept any liability with respect to the correctness of information in this document. Copyright by Volkswagen AG. Protected by copyright. Copyright by Volkswagen AG. Reproduction, in part or in whole, is not permitted unless authorised by Volkswagen AG. Volkswagen AG does not guarantee or accept any liability with respect to the correctness of information in this document. Copyright by Volkswagen AG.

satelettronica

Notes:

- If the display on fault reader increases in steps of 1.5 °C, this is control unit regulated and not caused by a defective sender.
- If irregular engine running occurs in certain temperature ranges and the temperature figure does not increase without interruption, the temperature signal is temporarily interrupted and the sender must be renewed.

- Press ⇒key.
- Press keys 0 and 6 for the function "End output" and confirm entry with the Q key.
- Switch off ignition.

If the figure does not increase uniformly:

- Replace coolant temperature sender (G62) with coolant temperature gauge sender (G2) =>Page 65 , item 21 .
- Interrogate fault memory, if necessary, repair any faults and then erase fault memory => Page 8 , interrogating and erasing fault memory.
- Erase the learnt values and adapt the engine control unit again=> Page 128 .

Continuation of check when 30.0 °C or 49.5 °C is displayed:

- Press ⇒key.
- Press keys 0 and 6 for the function "End output" and confirm entry with the Q key.
- Switch off ignition.

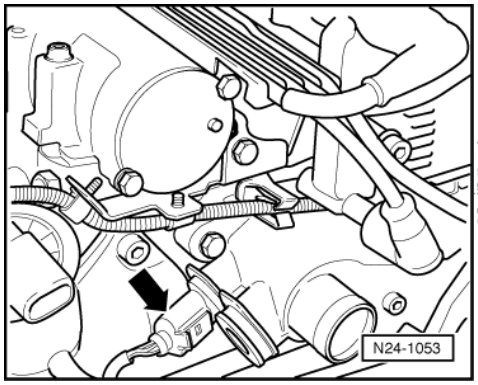

- -> Pull the 4 pin connector off coolant temperature sender (G62) with coolant temperature gauge sender (G2) -arrow-.

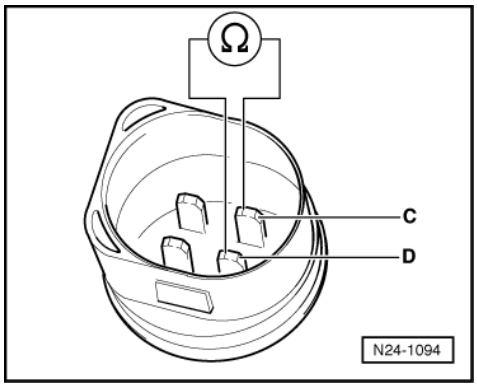

- -> Measure resistance of coolant temperature sender between contacts C (signal) and D (earth).

Protected by copyright. Copying for private or commercial purposes, in part or in whole, is not permitted unless authorised by Volkswagen AG. Volkswagen AG does not guarantee or accept any liability with respect to the correctness of information in this document. Copyright by Volkswagen AG.
satelettronica

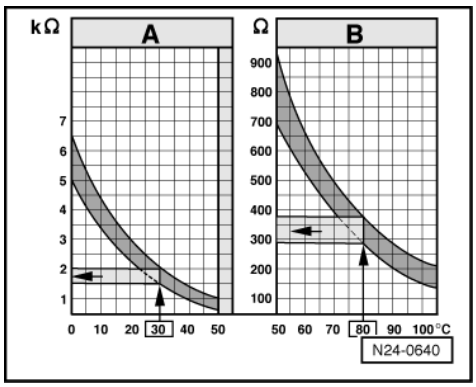

-> Specification see diagram

The diagram is divided into two temperature ranges:

A - From 0...50 °C
B - From 50...105 °C

Examples:

- 30 °C is in range A and corresponds to a resistance of 1.5...2.0 kω
- 80 °C is in range B and corresponds to a resistance of 275...375 ω

If the specification is not obtained:

- Replace coolant temperature sender (G62) with coolant temperature gauge sender (G2) =>Page 65 , item 21 .
- Interrogate fault memory, if necessary, repair any faults and then erase fault memory => Page 8 , interrogating and erasing fault memory.
- Erase the learnt values and adapt the engine control unit again=> Page 128 .

If the specification is obtained:

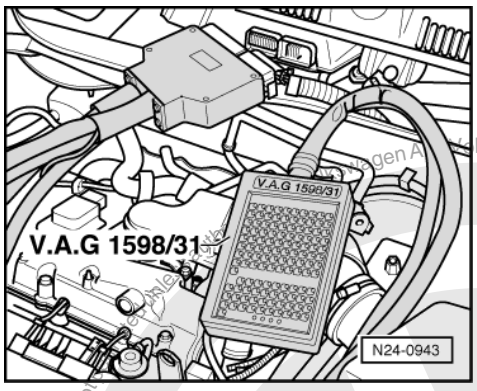

- -> Connect test box V.A.G 1598/31 to control unit wiring harness. The engine control unit remains disconnected.

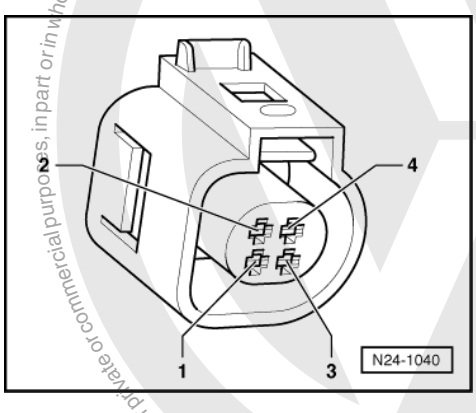

Volkswagen AG does not guarantee or accept any liability with respect to the correctness of information in this document. Copyright by Volkswagen AG.
Protected by copyright. Copying for private or commercial purposes, in part or in whole, is not permitted unless authorised by Volkswagen AG.
satelettronica

- -> Check wiring for open circuit between test box and 4-pin connector referring to current flow diagram.
  Contact 3 and test box socket 104
  Contact 4 and test box socket 83
  Wire resistance: max. 1.5 ω
- Additionally check wires for short to one another, to vehicle earth and to battery positive.
  Specification: ∞ω

If there is no fault in the wiring and the resistance measurement values are OK.:

- Replace engine control unit
  => Page 126 .

2.8 - Checking engine speed sender

Notes:

- The engine speed sender (G28) is a combined speed sender and reference mark sender.
- The engine can run without a signal from the G28. It is also possible (with considerable difficulty) to start the engine without a signal from the G28 (emergency running function).

Special tools, workshop equipment, testers, measuring instruments and auxiliary items required

- Hand multimeter V.A.G 1526 or multimeter V.A.G 1715
- Adapter set V.A.G 1594
- Test box V.A.G 1598/31
- Current flow diagram

Check conditions

- The battery voltage must be at least 11.5 V.
- All electrical consumers, e.g. lights and rear window heating must be switched off.
- If the vehicle is equipped with an air conditioning system, this must be switched off.

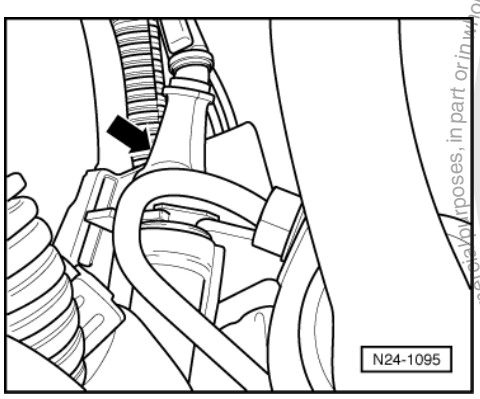

Test sequence

- Remove air cleaner => Page 76 , Fig. 2 .
- -> Detach black 3-pin connector to engine speed sender (G28) -arrow- (on left of intake manifold).

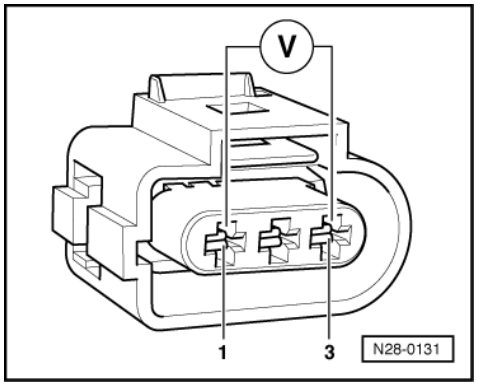

Protected by copyright. Copyright by Volkswagen AG.
Copying for private or commercial purposes, in part or in whole, is not permitted unless authorised by Volkswagen AG. Volkswagen AG does not guarantee or accept any liability with respect to the correctness of information in this document.
satelettronica

- -> Connect multimeter to measure voltage using aux. cables from V.A.G 1594 to contacts 1 (positive) and 3 (earth) on engine speed sender connector.
- Switch on ignition.
  Specification: min. 4.5 V
- Switch off ignition.

If no voltage is present:

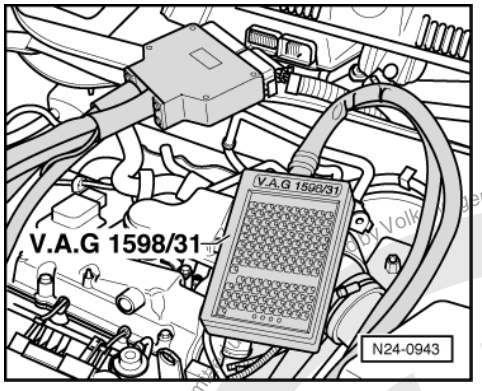

- -> Connect test box V.A.G 1598/31 to control unit wiring harness. The engine control unit remains disconnected.

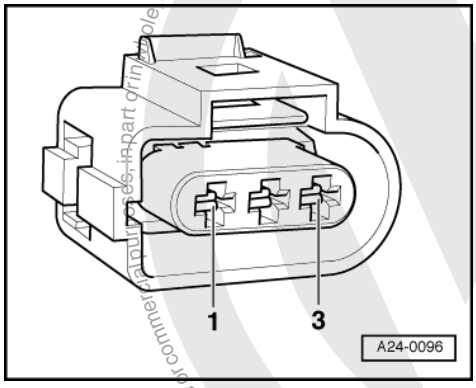

- -> Check wiring between test box and 3-pin connector referring to current flow diagram.
  Contact 1 and test box socket 89
  Contact 2 and test box socket 106
  Contact 3 and test box socket 99
  Wire resistance: max. 1.5 ω
- Additionally check wires for short to one another, to vehicle earth and to battery positive.
  Specification: ∞ω

If no wiring fault is detected and voltage was present between contacts 1 + 3:

- Replace engine speed sender (G28)
  =>Page 64 , item 16 .
- Interrogate fault memory, if necessary, repair any faults and then erase fault memory => Page 8 , interrogating and erasing fault memory.
- Erase the learnt values and adapt the engine control unit again=> Page 128 .

If no wiring fault is detected and no voltage was present between contacts 1 + 3:

- Replace engine control unit
  => Page 126 .

Protected by copyright. Copying for private or commercial purposes, in part or in whole is not permitted unless authorised by Volkswagen AG. Volkswagen AG does not guarantee or accept any liability with respect to the correctness of information in this document. Copyright by Volkswagen AG.
satelettronica

2.9 - Checking injectors

Special tools, workshop equipment, testers, measuring instruments and auxiliary items required

- Hand multimeter V.A.G 1526 or multimeter V.A.G 1715
- Diode test lamp V.A.G 1527
- Adapter set V.A.G 1594
- Test box V.A.G 1598/31
- Current flow diagram

Check conditions

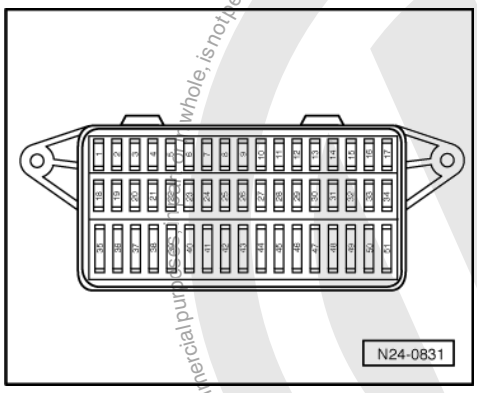

- -> Fuse No. 3 must be OK.
- The battery voltage must be at least 11.5 V.
- Earth connection in plenum chamber OK.
- All electrical consumers, e.g. lights and rear window heating must be switched off.
- If the vehicle is equipped with an air conditioning system, this must be switched off.
- Fuel pump relay must be OK =>Page 22 , final control diagnosis.
- Engine speed sender must be OK, checking =>Page 98 .

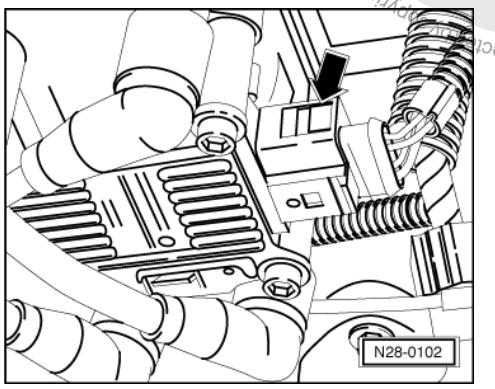

- Hall sender must be OK, checking =>Page 150 .

Checking activation and voltage supply

- Remove cover over camshaft housing =>Page 76 , Fig. 1 .
- -> Pull 4 pin connector off ignition transformer (N152) -arrow-.

Protected by copyright. Copyright by Volkswagen AG. Volkswagen AG does not guarantee or accept any liability with respect to the correctness of information in this document. Copyright by Volkswagen AG. Protected by copyright. Copying, in whole or in part, is not permitted unless authorised by Volkswagen AG. Volkswagen AG does not guarantee or accept any liability with respect to the correctness of information in this document. Copyright by Volkswagen AG.
satelettronica

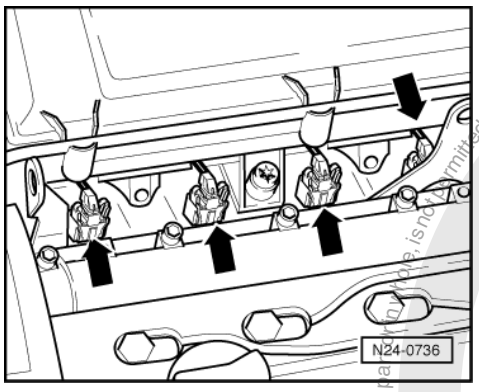

- -> Pull plug -arrows- off all injectors.

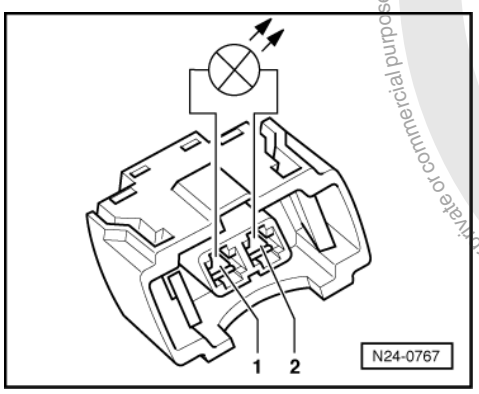

- -> Connect diode test lamp V.A.G 1527 using aux. cables from V.A.G 1594 to connector contacts of Cyl. 1.
- Operate the starter and check the voltage supply for No. 1 cylinder injector.
  The LED must flicker
- Repeat check at the injector connectors for Cyls. 2...4.
- Switch off ignition.

If the LED flickers on one or several cylinders:

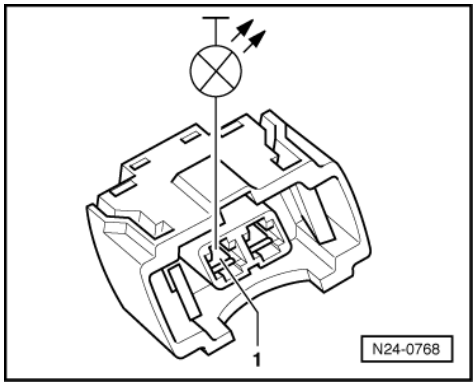

- -> Connect diode test lamp to contact 1 and earth of relevant injector connector.
- Operate the starter and check the voltage supply for No. 1 cylinder injector.
  The LED must light up
- Repeat check at the injector connectors for Cyls. 2...4.
- Switch off ignition.

If the LED does not light up:

- Check wire between 2 pin connector contact 1 and fuel pump relay (J17) for open circuit using current flow diagram.
  Wire resistance: max. 1.5 ω

Copyright by Volkswagen. Copying for private or commercial purposes, in any form or medium, is not permitted unless authorised by Volkswagen. Volkswagen does not guarantee or accept any liability with respect to the correctness of information in this document.
satelettronica

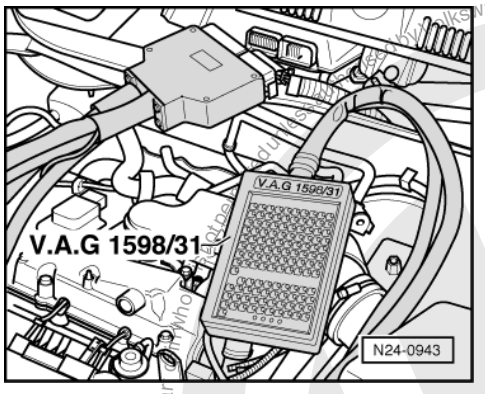

If the LED does not light up on one or several cylinders:

- -> Connect test box V.A.G 1598/31 to control unit wiring harness. The engine control unit remains disconnected.

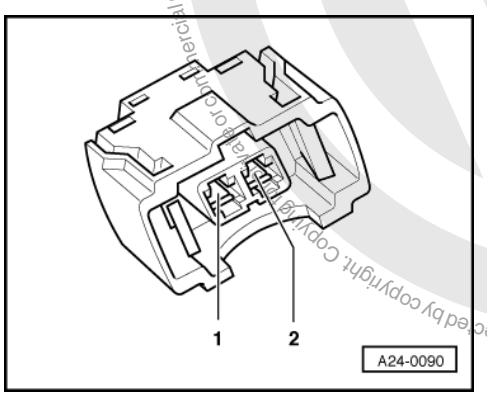

- -> Check wiring for open circuit between test box and 2-pin connector referring to current flow diagram.
  Injector 1: Contact 2 and socket 88
  Injector 2: Contact 2 and socket 87
  Injector 3: Contact 2 and socket 85
  Injector 4: Contact 2 and socket 86
  Wire resistance: max. 1.5 ω
- Additionally check wires for short to one another between contacts 2 to vehicle earth and to battery positive.
  Specification: ∞ω
- Check wiring between connector contacts 1 of injectors for open circuit to one another.
  Wire resistance: Max. 1.5 ω

If no fault is detected in the wiring:

- Check resistance of injectors
  => Page 102 .

Checking resistance of injectors

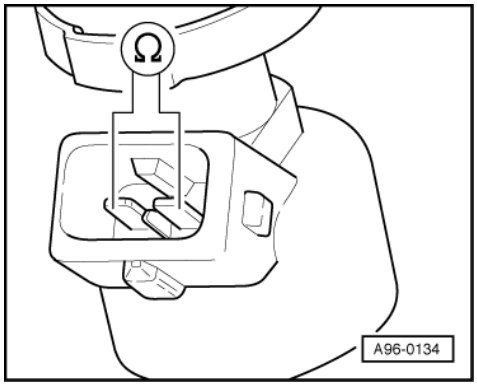

Volkswagen AG. Volkswagen AG does not guarantee or accept any liability with respect to the correctness of information in this document. Copyright by Volkswagen AG.
Protected by copyright. Copying for private or commercial purposes, partly or in whole, is not permitted unless authorised by Volkswagen AG.
satelettronica

- -> Check resistance of injectors between contacts.
  Specification: 12.0...17.0 ω(at room temperature)

Note:
The resistance figures are valid for approx. 20 °C. At higher temperatures the resistance figures will increase.
If the specification is not attained:
- Remove air cleaner => Page 76 , Fig. 2 .
- Renew defective injector
  =>Page 72 , item 7 .

Perform installation of injectors in reverse order. When doing this note the following:
- Renew O-rings on all injectors and lightly moisten with clean engine oil.
- Insert injectors vertically and in the correct position into the fuel rail and secure with retaining clips.
- With injectors secured to fuel rail, fit fuel rail on intake manifold and press in evenly.

- Interrogate fault memory, if necessary, repair any faults and then erase fault memory => Page 8 , interrogating and erasing fault memory.
- Erase the learnt values and adapt the engine control unit again=> Page 128 .

If the resistances are OK and no faults can be detected in the wiring:
- Replace engine control unit
  => Page 126 .

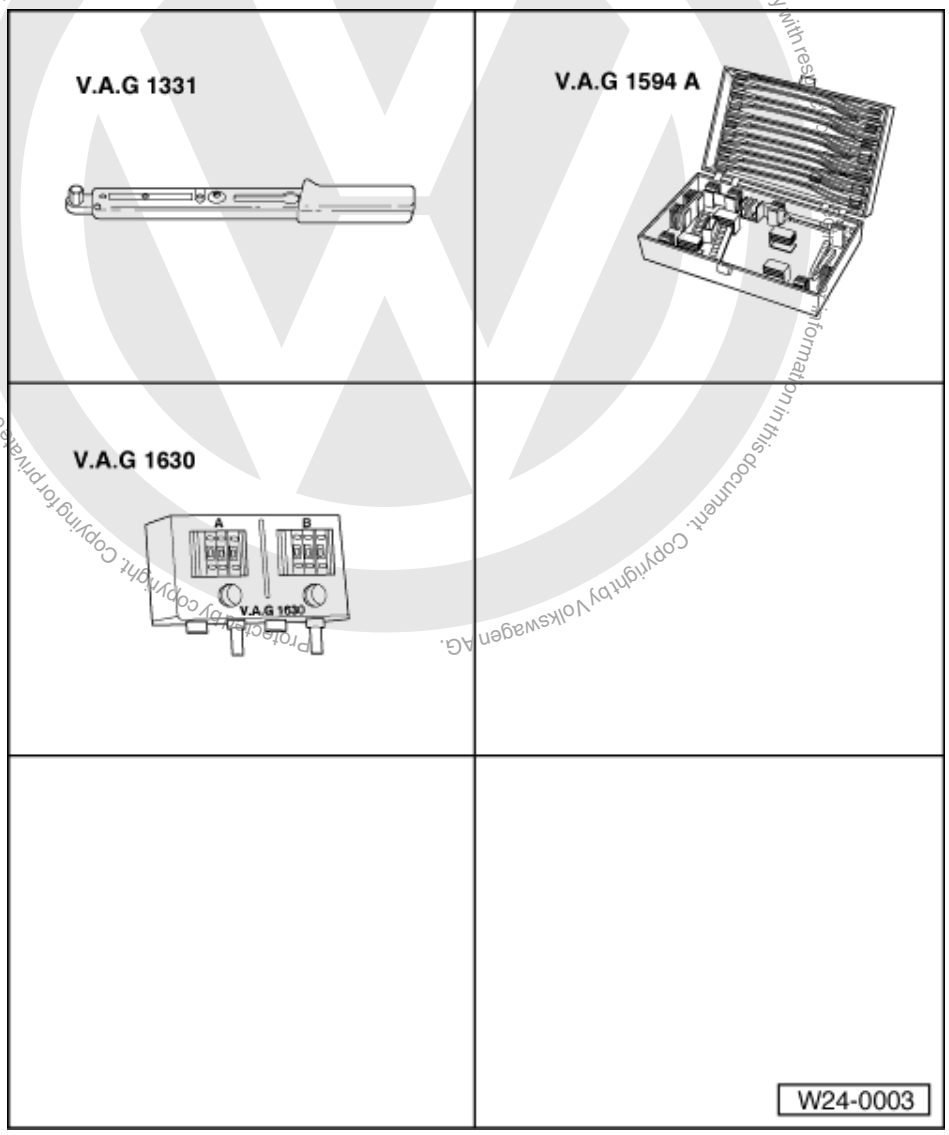

Protected by copyright. Copying for private or commercial purposes, in part or in whole, is not permitted unless authorised by Volkswagen AG. Volkswagen AG does not guarantee or accept any liability with respect to the information in this document. Copyright by Volkswagen AG.
satelettronica

Checking spray pattern and for leaks

Special tools, workshop equipment, test and measuring appliances and auxiliary items required

- V.A.G 1331 Torque wrench (5...50 Nm)
- V.A.G 1594 A Adapter set
- V.A.G 1630 Digital potentiometer
- Measuring container

Test conditions

- The fuel pressure must be in order, checking
  => Page 107 , checking fuel pressure regulator and holding pressure.

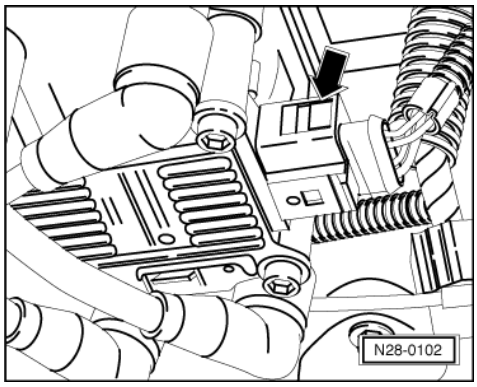

Test sequence

- Remove air cleaner => Page 76 , Fig. 2 .
- -> Pull 4 pin connector off ignition transformer (N152) -arrow-.

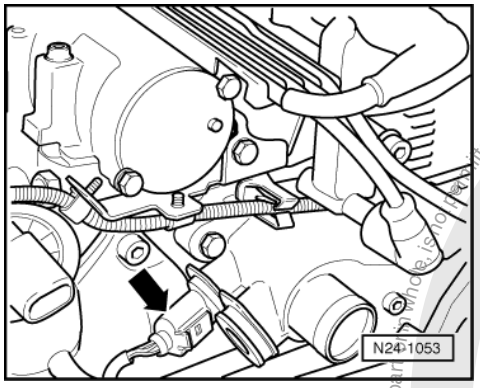

- -> Pull the 4 pin connector off coolant temperature sender (G62) with coolant temperature gauge sender (G2) -arrow-.

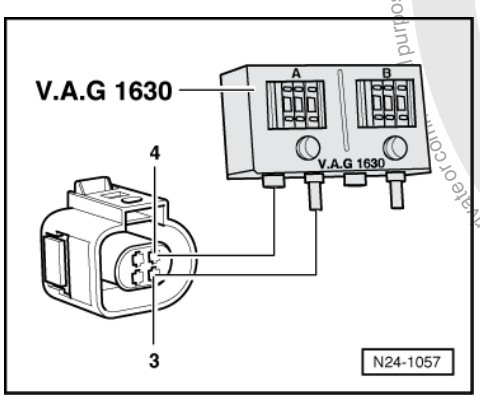

Protected by copyright. Copying for private or commercial purposes, in part or in whole, is not permitted unless authorised by Volkswagen AG. Volkswagen AG does not guarantee or accept any liability with respect to the correctness of information in this document. Copyright by Volkswagen AG.
satelettronica

- -> Connect digital potentiometer V.A.G 1630 using aux. cables from V.A.G 1594 to connector contacts 3+4 and set connected side to 15 kω.

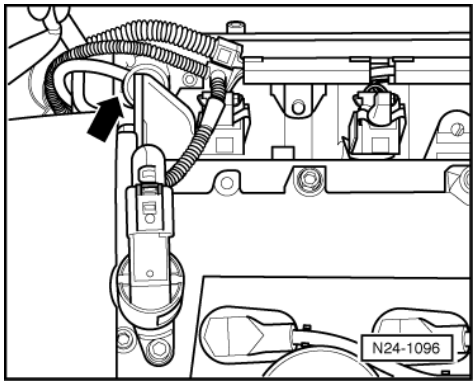

- -> Pull the vacuum hose off fuel pressure regulator -arrow-.

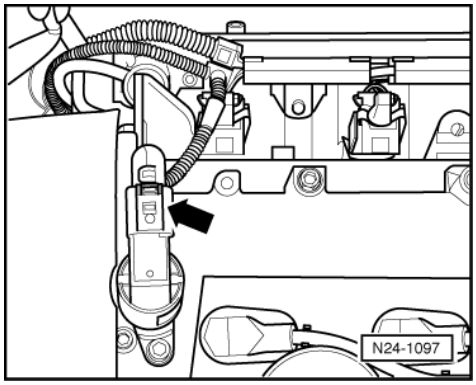

- -> Disconnect 2-pin connector from camshaft adjustment valve(N205) -arrow-.

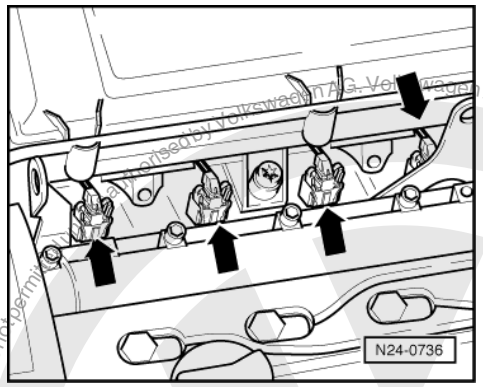

- -> Pull plug -arrows- off all injectors.
- Unclip injector wiring harness on fuel rail.
- Remove fuel rail complete with all injectors from intake manifold (fuel hoses remain connected) => Page 63 , item 9 .

satelettronica
Protected by copyright. Copying for private or commercial purposes, in part or in whole, is not permitted unless authorised by Volkswagen AG. Volkswagen AG does not guarantee or accept any liability with respect to the correctness of information in this document. Copyright by Volkswagen AG.

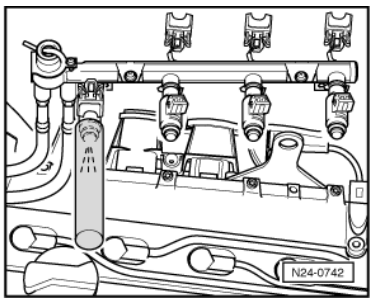

- -> Hold a small container under the injector to be tested and fit the connector.
- Have 2nd person operate starter. Injector must spray in pulses.
- Repeat check with other injectors ensuring that injector to be checked is only connected.
- Switch off ignition.
- Switch off ignition and afterwards check injectors for leaks. No more than
  2 drops/min
  may leak from each injector.

If the fuel loss is greater:

- Renew defective injector
  =>Page 72 , item 7 .

Perform installation of injectors in reverse order. When doing this note the following:

- Renew O-rings on all injectors and lightly moisten with clean engine oil.
- Insert injectors vertically and in the correct position into the fuel rail and secure with retaining clips.
- With injectors secured to fuel rail, fit fuel rail on intake manifold and press in evenly.

- Interrogate fault memory, if necessary, repair any faults and then erase fault memory => Page 8 , interrogating and erasing fault memory.
- Erase the learnt values and adapt the engine control unit again=> Page 128 .

Protected by copyright. Copying for private or commercial purposes, in part or in whole, is not permitted unless authorised by Volkswagen AG. Volkswagen AG does not guarantee or accept any liability with respect to the correctness of information in this document. Copyright by Volkswagen AG.

satelettronica

2.10 - Checking fuel pressure regulator and holding pressure

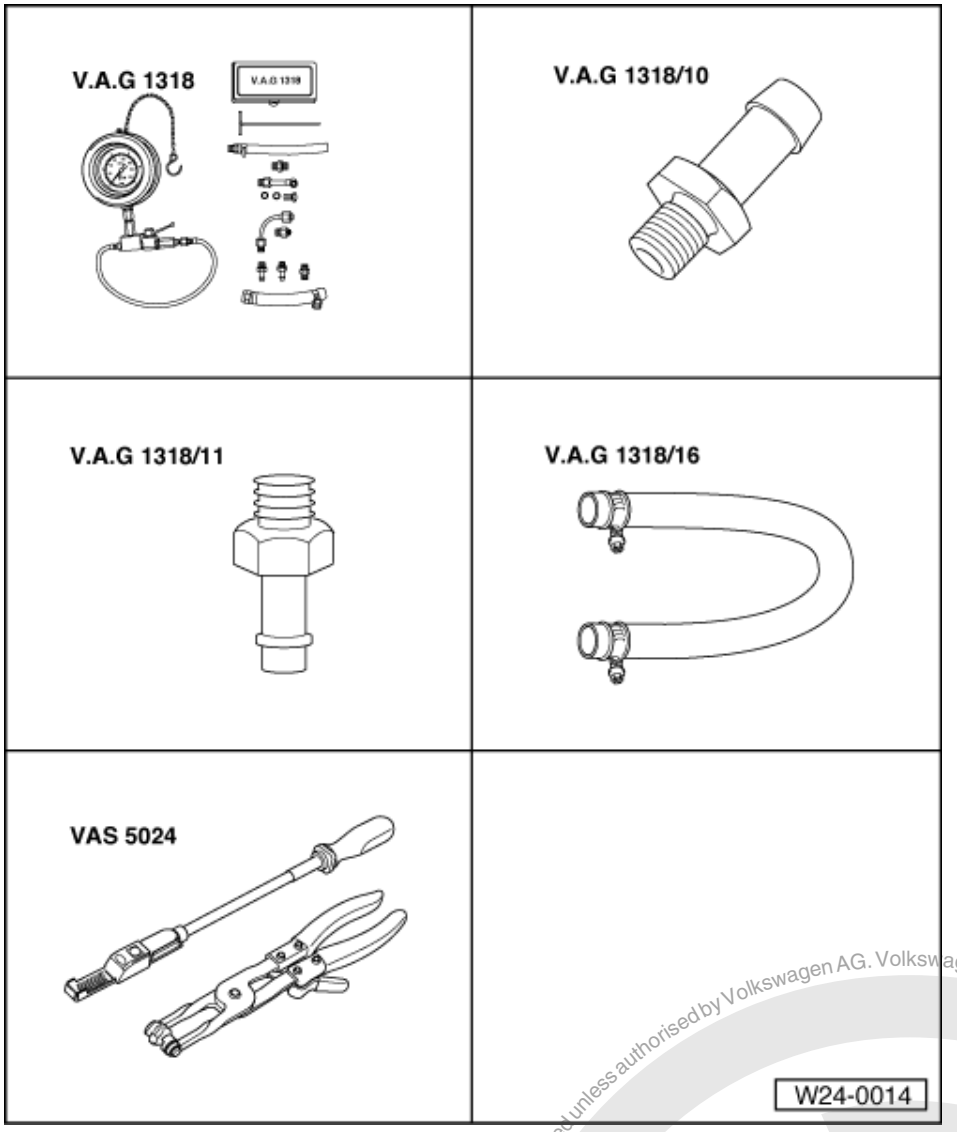

Function

The fuel pressure regulator regulates the fuel pressure depending on intake manifold pressure.

Special tools, workshop equipment, test and measuring appliances and auxiliary items required

- V.A.G 1318 Pressure gauge
- V.A.G 1318/10 Adapter
- V.A.G 1318/11 Adapter
- V.A.G 1318/16 Hose adapter
- VAS 5024 Assembly tool for spring-type clamps

satelettronica
Protected by copyright. Copying for private or commercial purposes, in part or in whole, is not permitted unless authorised by Volkswagen AG. Volkswagen AG does not guarantee or accept any liability with respect to the correctness of information in this document. Copyright by Volkswagen AG.

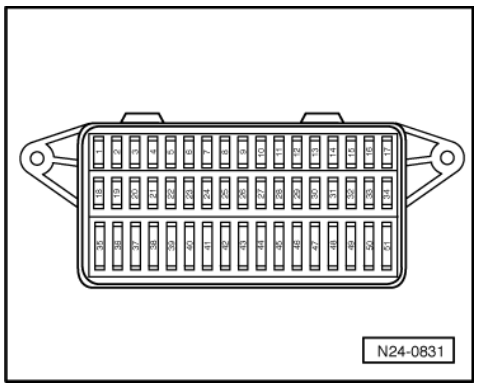

Test sequence

- -> Pull fuel pump fuse No. 40 out of fuse holder.
- Remove air cleaner => Page 76 , Fig. 2 .

Warning!
Fuel supply lines are under pressure! Before removing from hose connection wrap a cloth around the connection. Then release pressure by carefully pulling hose off connection.

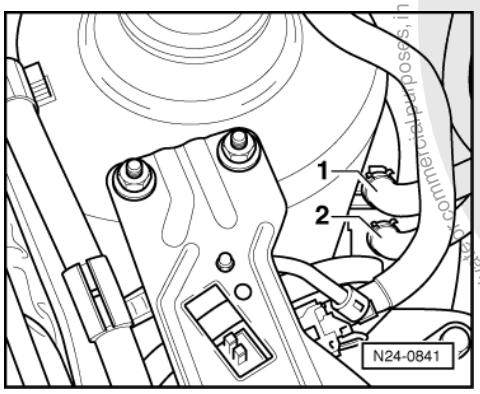

- -> Pull off supply pipe/hose -1- (with white marking) and collect fuel that leaks out with a cloth.

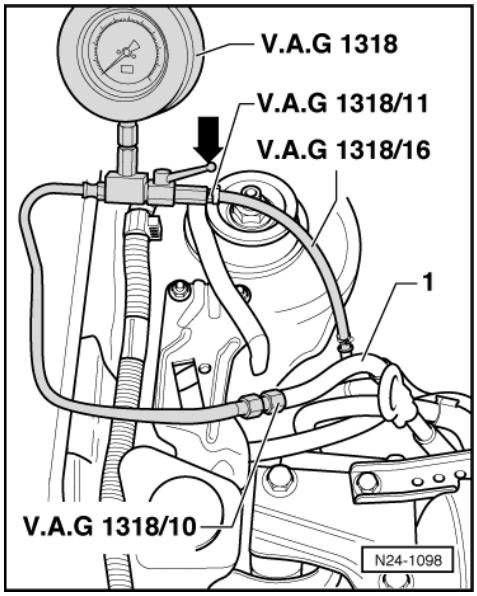

- -> Connect pressure gauge V.A.G 1318 with adapter V.A.G 1318/10 to supply hose -1- and with adapter V.A.G 1318/11 and hose adapter V.A.G 1318/16 to supply pipe.
- Open shut-off tap on pressure gauge. The handle -arrow- points in direction of flow.
- Fit fuel pump fuse No. 40 into fuse holder.

Protected by copyright. Copying for private or commercial purposes, in part or in whole, is not permitted unless authorised by Volkswagen AG. Volkswagen AG does not guarantee or accept any liability with respect to the correctness of information in this document. Copyright by Volkswagen AG.
satelettronica

- Start the engine and run at idling speed.
- Measure fuel pressure.
  Specification: Approx. 2.5 bar

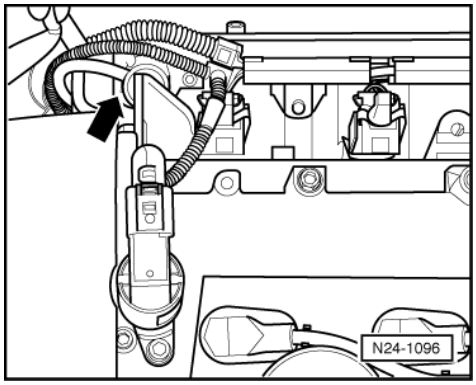

- -> Pull vacuum hose off fuel pressure regulator -arrow-. The fuel pressure must increase to approx. 3.0 bar.
- Switch off ignition.

If the specification is not obtained:

- Check quantity supplied by fuel pump.

=> Rep. Gr. 20; Removing and installing parts of fuel system; checking fuel pump

If the specification is obtained:

- Check for leaks and holding pressure by observing pressure drop on gauge. After 10 minutes there must be
  a residual pressure of
  at least 2.0 bar.

If the holding pressure drops below 2 bar:

- Start the engine and run at idling speed.

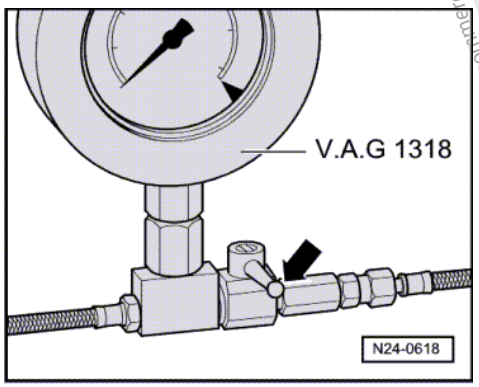

- -> Switch ignition off after the pressure has built-up. At the same time close pressure measured device cut-off tap (handle cross through-flow direction -arrow-).
- Observe pressure drop on gauge.

If the pressure does not drop:

- Check fuel pump non-return valve.

=> Rep. Gr. 20; Removing and installing parts of fuel system; checking fuel pump

If the pressure drops again:

Protected by copyright. Copying for private or commercial purposes, in part or in whole, is not permitted unless authorised by Volkswagen AG. Copyright by Volkswagen AG. Volkswagen AG does not guarantee or accept any liability with respect to the correctness of information in this document.
satelettronica

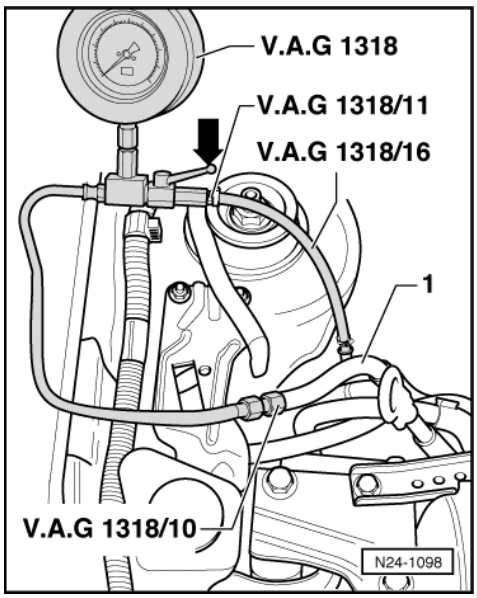

- -> Open pressure gauge V.A.G 1318 shut-off tap (handle in direction of flow).
- Start the engine and run at idling speed.

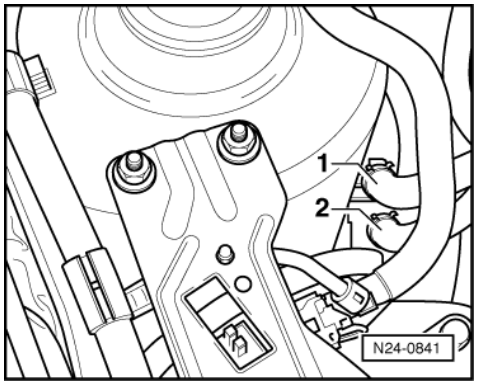

- -> Switch ignition off after the pressure has build-up. At the same time clamp-off the return hose (with blue marking) -2-.

If the pressure does not drop:

- Renew fuel pressure regulator
  =>Page 73 , item 11 .

If the pressure drops again:

- Check pipe connections, O rings on fuel manifold and injectors for leaks.
- Check pressure gauge for leaks.

Note:

Before removing pressure gauge place a cloth around the connections to be loosened.

Protected by copyright. Copying for private or commercial purposes, in part or in whole, is not permitted unless authorised by Volkswagen AG. Volkswagen AG does not guarantee or accept any liability with respect to the correctness of information in this document. Copyright by Volkswagen AG.
satelettronica

2.11 - Checking intake air system for leaks (unmetered air)

Checking with engine leak detector spray G 001 800 A1

Notes:

- The vacuum in the intake system will cause the leak detector spray to be drawn in with the unmetered air. The leak detector spray reduces the ignitability of the mixture. This leads to a drop in engine speed and to a change of Lambda probe reading.
- The safety precautions listed on the container must be adhered to.

Special tools, workshop equipment, testers, measuring instruments and auxiliary items required

- Fault reader V.A.G 1551 (or vehicle system tester V.A.G 1552) with cable V.A.G 1551/3
- Engine leak detector spray G 001 800 A1

Test conditions

- Coolant temperature must be at least 80 °C, =>display group 01, display zone 2.

Test sequence

- Connect fault reader V.A.G 1551 (V.A.G 1552). Start engine and select "Address word" 01 of engine control unit. When doing this the engine must be running at idling speed.
  (Connecting fault reader and selecting engine control unit => Page 4 .)

-> Indicated on display:

```
Rapid data transfer      HELP
Select function XXX
```

Press keys 0 and 8 for the function "Read measured value block" and confirm entry with Q key.

-> Indicated on display:

```
Read measured value block
Input display group number XXX
```

- Press keys 0, 0 and 1 for "Display group number 1" and confirm entry with Q key.

-> Indicated on display:
(1...4 = Display zones)

```
Read measured value block 1
    1     2     3     4
```

Only continue with the test when

- The coolant temperature exceeds 80 °C
  -display zone 2-

- Observe the engine speed in display zone 1 and the Lambda regulation in display zone 3.
- Systematically spray parts of the intake system with engine leak detector spray.

If the engine speed drops or the Lambda regulator changes:

- Press ⇒key.
- Press keys 0 and 6 for the function "End output" and confirm entry with the Q key.
- Switch off ignition.
- Check sprayed areas of intake system for leaks and rectify if necessary.

satelettronica

3 - Checking functions

3.1 - Checking functions

3.2 - Idling check

Notes:

- Idling speed, ignition timing and CO content are not adjustable.
- The idling speed is regulated to specification by the throttle valve control part.
- CO content regulated by Lambda regulation. Faults in Lambda control are detected in self-diagnosis and stored in fault memory.

Special tools, workshop equipment, testers, measuring instruments and auxiliary items required

- Fault reader V.A.G 1551 (or vehicle system tester V.A.G 1552) with cable V.A.G 1551/3

Check conditions

- Exhaust system between cylinder head and catalyst free of leaks
- All electrical consumers, e.g. lights and rear window heating must be switched off.
- If the vehicle is equipped with an air conditioning system, this must be switched off.
- Coolant temperature must be at least 80 °C, =>display group 01, display zone 2.

Test sequence

- Connect fault reader V.A.G 1551 (V.A.G 1552). Start engine and select "Address word" 01 of engine control unit. When doing this the engine must be running at idling speed.
  (Connecting fault reader and selecting engine control unit => Page 4 .)
- Interrogate fault memory, if necessary, repair any faults and then erase fault memory => Page 8 , interrogating and erasing fault memory.
- Then:
  - Leave fault reader V.A.G 1551 connected.
  - Continue running engine at idling speed.

-> Indicated on display:

```
Rapid data transfer      HELP
Select function XXX
```

- Press keys 0 and 8 for the function "Read measured value block" and confirm entry with Q key.

-> Indicated on display:

```
Read measured value block
Input display group number XXX
```

- Press keys 0, 0 and 1 for "Display group number 1" and confirm entry with Q key.

-> Indicated on display:
(1...4 = Display zones)

```
Read measured value block 1
     1     2     3     4
```

- Check the adjustment conditions in display zone 4. Continue with test first when specifications are achieved.:
  Specification: 1x111111

  Significance of numbers in 8-digit number block
  => Page 34 .

- Briefly increase engine speed (rev- up) and then allow engine to run at idling speed for 2 minutes.

Protected by copyright. Copyright by Volkswagen AG. Volkswagen AG does not guarantee or accept any liability with respect to the correctness of information in this document. Copyright by Volkswagen AG. Copying for private or commercial purposes, in part or in whole, is not permitted unless authorised by Volkswagen AG.
satelettronica

Checking idling speed

- Check idling speed in display zone 1.
  Specification: 800...900 rpm1)

  1) Up-to-date specifications:

=> Exhaust emissions test binder

- Press ⇒key.
- Press keys 0 and 6 for the function "End output" and confirm entry with the Q key.

If the idling speed is not obtained:

- Erase the learnt values and adapt the engine control unit again=> Page 128 .
- Carry out test drive.

Observe the valid safety precautions when carrying out a road test => Page 77 .

- Again interrogate the control unit fault memory.
- Repeat the idling check.

If the specifications are not obtained again:

- Check throttle valve control part
  => Page 85 .
- Check the operating condition of engine
  => Page 122 .
- Check intake system for leaks (unmetered air) => Page 111 .
- Check the signals from/to air conditioning system
  => Page 134 .

3.3 - Checking Lambda probe and Lambda regulation before catalyst

Note:

Only gold-plated contacts must be used to repair the contacts in the Lambda probes connectors.

Special tools, workshop equipment, testers, measuring instruments and auxiliary items required

- Hand multimeter V.A.G 1526 or multimeter V.A.G 1715
- Fault reader V.A.G 1551 (or vehicle system tester V.A.G 1552) with cable V.A.G 1551/3
- Adapter set V.A.G 1594

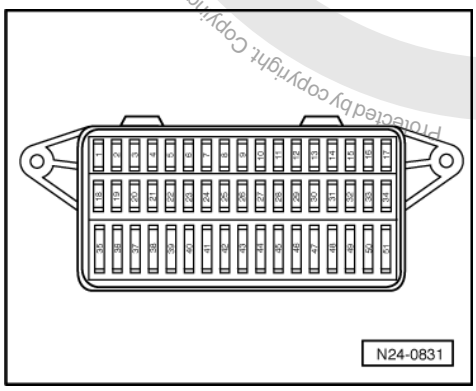

- Test box V.A.G 1598/31
- Current flow diagram

Protected by copyright. Copying for private or commercial purposes, in part or in whole, is not permitted unless authorised by Volkswagen AG. Volkswagen AG does not guarantee or accept any liability with respect to the correctness of information in this document. Copyright by Volkswagen AG.
satelettronica

Check conditions

- -> Fuse No. 1 must be OK.
- Exhaust system between catalyst and cylinder head must be free of leaks
- The battery voltage must be at least 11.5 V.
- All electrical consumers, e.g. lights and rear window heating must be switched off.
- The vehicle must only be run at idling speed when the engine is started, to enable the disturbance variable for the emissions test to be switched on and no faults for the coolant temperature sender (G62) are entered in the fault memory.

  Wait at least 60 seconds before disconnecting the 4-pin connector from coolant temperature sender (G62).

- No faults must be stored in fault memory => Page 8 , interrogating and erasing fault memory.
- Coolant temperature must be at least 80 °C, =>display group 04, display zone 3.

Functional check

- Connect fault reader V.A.G 1551 (V.A.G 1552). Start engine and select "Address word" 01 of engine control unit. When doing this the engine must be running at idling speed.
  (Connecting fault reader and selecting engine control unit => Page 4 .)

-> Indicated on display:

```
Rapid data transfer      HELP
Select function XXX
```

- Press keys 0 and 8 for the function "Read measured value block" and confirm entry with Q key.

-> Indicated on display:

```
Read measured value block
Input display group number XXX
```

- Press keys 0, 3 and 0 for the "Display group number 30" and confirm entry with Q key.

-> Indicated on display:
(1...2 = Display zones)

```
Read measured value block 30
     1     2
```

- Check status of Lambda regulation before catalyst (display zone 1):
  Specification: 111

  Significance of numbers in 3-digit number block
  => Page 42 .

If the specification is not obtained:

- Check the Lambda probe heating before catalyst
  => Page 79 .

If the specification is obtained:

- Change to display group 32 as follows:
- Press C key.
- Press keys 0, 3 and 2 for "Display group number 32" and confirm entry with Q key.

-> Indicated on display:
(1...2 = Display zones)

```
Read measured value block 32
     1     2
```

- Check Lambda learnt values at idling speed (additive) in display zone 1.
  Specification: -15.0...15.0 %
- Check Lambda learnt values at part load (multiplicative) in display zone 2.

Protected by copyright. Copying for private or commercial purposes, in part or in whole, is not permitted unless authorised by Volkswagen AG. Volkswagen AG does not guarantee or accept any liability with respect to the correctness of information in this document. Copyright by Volkswagen AG.

satelettronica

Specification: -20.0...20.0 %

If the specifications are not obtained:

- Press ⇒key.
- Press keys 0 and 6 for the "End output" function and confirm input with the Q key.
- Switch off ignition.
- =>Page 43 , Evaluating display group 32

If the specifications are obtained:

- Change to display group 33 as follows:
  V.A.G 1551: Press key 3
  V.A.G 1552: Press key ↑

-> Indicated on display:
(1...2 = Display zones)

```
Read measured value block 33
     1      2
```

- Check Lambda regulation in display zone 1. the display must fluctuate slightly within range
  -15.0...15.0 %.

- Check Lambda probe voltage in display zone 2.
  The voltage must fluctuate in range of
  1.4... 1.6 V.

If the display in display zones 1 and 2 remains constantly at a value:

- Press ⇒key.
- Press keys 0 and 6 for the function "End output" and confirm entry with the Q key.
- Switch off ignition.
- Check basic voltage of Lambda probe before catalyst => Page 116 .

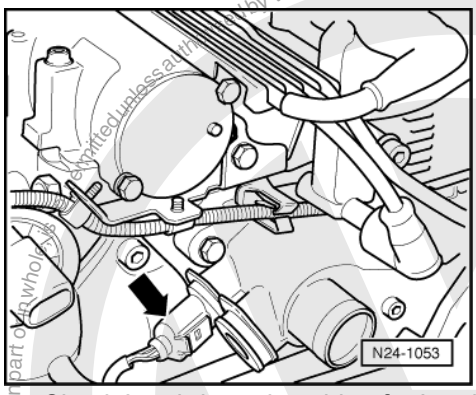

- Check Lambda probe wiring for Lambda probe before catalyst
  => Page 117 .

If the display fluctuates in display zones 1 and 2:

- -> Pull the 4 pin connector off coolant temperature sender (G62) with coolant temperature gauge sender (G2) -arrow-.

Note:

This test will only function if the engine has been running for at least 60 seconds at idling speed only. Once the connector has been disconnected, various component diagnostics and the Lambda regulator are electronically locked for 20 seconds. The fuel/air mixture enriches and the Lambda probe has to recognise this by a reduction in voltage.

- Observe Lambda probe voltage in display zone 2:
  The voltage must decrease and and within
  60 seconds revert to specification of

satelettronica

1.4...1.6 V
.

If the specification is not obtained:

- Reconnect 4-pin connector from coolant temperature sender (G62).
- Press ⇒key.
- Press keys 0 and 6 for the function "End output" and confirm entry with the Q key.
- Carry out a test drive to remove possible residue on Lambda probe and repeat check.

Observe the valid safety precautions when carrying out a road test => Page 77 .

If specifications are not obtained after test drive:

- Renew Lambda probe before catalyst (G39)
  =>Page 59 , item 19 .

If the specifications are obtained:

- Reconnect 4-pin connector to coolant temperature sender (G62) immediately.
- Observe Lambda probe voltage in display zone 2 again:
  The voltage must rise and fall again to specified range of
  1.4...1.6 V again within
  60 seconds.
- Press ⇒key.
- Press keys 0 and 6 for the function "End output" and confirm entry with the Q key.
- Switch off ignition.

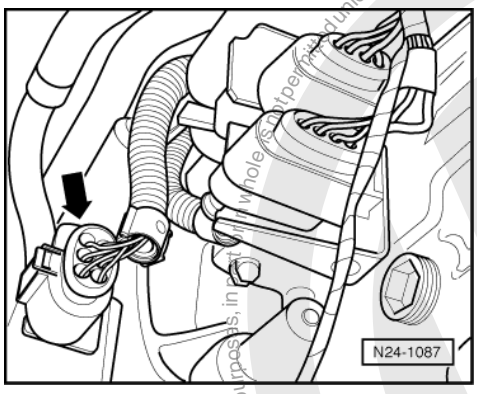

Checking basic voltage of Lambda probe before catalyst

- Remove noise insulation tray.
- -> Separate 6-pin connector (black) to Lambda probe before catalyst (G39) -arrow-.

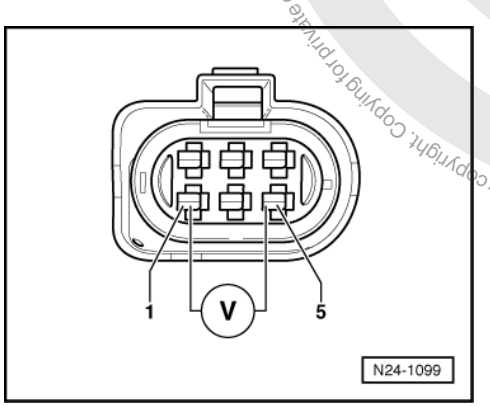

- -> Connect multimeter with aux. cables from V.A.G 1594 to measure voltage at contacts 1 + 5 (connector to engine control unit).
- Switch on ignition and measure basic voltage.
  Specification: 0.40...0.50 V

Protected by copyright. Copying for private or commercial purposes, in part or in whole, is not permitted unless authorised by Volkswagen AG. Volkswagen AG does not guarantee or accept any liability with respect to the correctness of information in this document. Copyright by Volkswagen AG.
satelettronica

- Switch off ignition.

If the specification is not obtained:

- Check Lambda probe wiring for Lambda probe before catalyst
  => Page 117 .

If the specification is obtained:

- Renew Lambda probe before catalyst (G39)
  =>Page 59 , item 19 .
- Interrogate fault memory, if necessary, repair any faults and then erase fault memory => Page 8 , interrogating and erasing fault memory.
- Erase the learnt values and adapt the engine control unit again=> Page 128 .

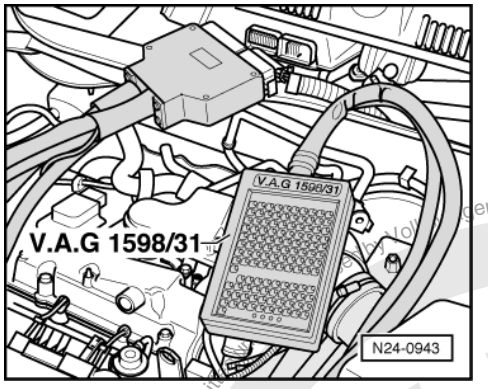

Checking Lambda probe wiring for Lambda probe before catalyst

- -> Connect test box V.A.G 1598/31 to control unit wiring harness. The engine control unit remains disconnected.
- Remove noise insulation tray.

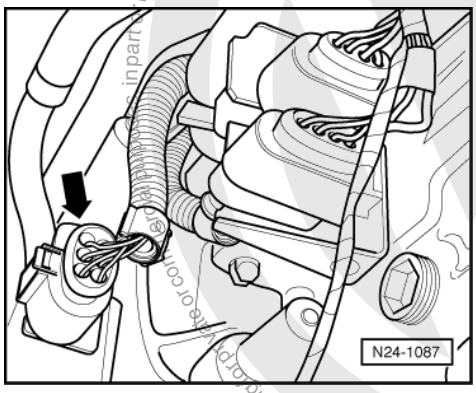

- -> Separate 6-pin connector (black) to Lambda probe before catalyst (G39) -arrow-.

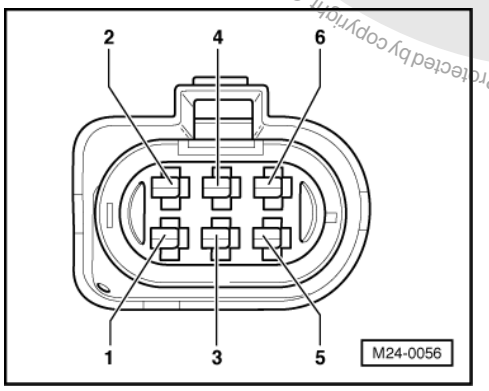

Protected by copyright. Copyright by Volkswagen AG.
Volkswagen AG. Volkswagen AG does not guarantee or accept any liability with respect to the correctness of information in this document.
satelettronica

- -> Check wiring for open circuit between test box and 6-pin connector to control unit referring to current flow diagram.
  Contact 1 and test box socket 14
  Contact 2 and test box socket 15
  Contact 5 and test box socket 34
  Contact 6 and test box socket 33
  Wire resistance: max. 1.5 ω
- Check wiring on 6-pin connector additionally for short to one another.
  Specification: ∞ω

If no fault is detected in the wiring:

- Renew Lambda probe before catalyst (G39)
  =>Page 59 , item 19 .
- Interrogate fault memory, if necessary, repair any faults and then erase fault memory => Page 8 , interrogating and erasing fault memory.
- Erase the learnt values and adapt the engine control unit again=> Page 128 .

3.4 - Checking Lambda probe and Lambda regulation after catalyst

Note:

Only gold-plated contacts may be used when servicing Lambda probe connector contacts 3 and 4.

Special tools, workshop equipment, testers, measuring instruments and auxiliary items required

- Hand multimeter V.A.G 1526 or multimeter V.A.G 1715
- Fault reader V.A.G 1551 (or vehicle system tester V.A.G 1552) with cable V.A.G 1551/3
- Adapter set V.A.G 1594

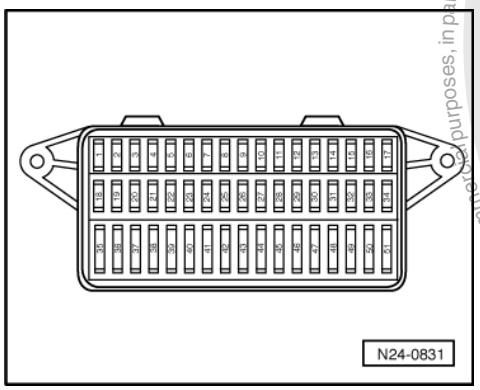

- Test box V.A.G 1598/31
- Current flow diagram

Check conditions

- -> Fuse No. 1 must be OK.
- Exhaust system between catalyst and cylinder head must be free of leaks
- The battery voltage must be at least 11.5 V.
- All electrical consumers, e.g. lights and rear window heating must be switched off.
- The signals from brake light switch and brake pedal switch must be OK, checking => Page 140 .
- Coolant temperature must be at least 80 °C, =>display group 04, display zone 3.

Protected by copyright. Copying for private or commercial purposes, in part or in whole, is not permitted unless authorised by Volkswagen AG. Volkswagen AG does not guarantee or accept any liability with respect to the correctness of information in this document. Copyright by Volkswagen AG.
satelettronica

Functional check

Note:

The Lambda regulation after catalyst is master of the Lambda regulation before catalyst and serves as a corrective regulation.

- Connect fault reader V.A.G 1551 (V.A.G 1552). Start engine and select "Address word" 01 of engine control unit. When doing this the engine must be running at idling speed.
  (Connecting fault reader and selecting engine control unit => Page 4 .)

-> Indicated on display:

```
Rapid data transfer      HELP
Select function XXX
```

- Press keys 0 and 4 for the "Introduce basic setting" function and confirm entry with Q key.

-> Indicated on display:

```
Basic setting
Input display group number XXX
```

- Press keys 0, 4 and 3 for "Display group number 43" and confirm entry with Q key.

-> Indicated on display:
(1...4 = Display zones)

```
System in basic setting      43
     1     2     3     4
```

- Depress brake pedal and hold it down.

  The engine speed is raised by the engine control unit to
  approx. 1380...1440 rpm.

- Run the engine at increased speed until the display
  in display zone 4 jumps from "Test OFF" to"Test ON.

Note:

This process can take a few minutes.

- Maintain the increased engine speed until the display
  in display zone 4 shows the specification "B1-P2 OK.

If display zone 4 shows "B1-P2 n.OK":

- Check Lambda probe voltage in display zone 3.
  The voltage must
  fluctuate in range of
  0.00... 1.00 V.

If the display in display zone 3 fluctuates:

- Interrogate fault memory, if necessary, repair any faults and then erase fault memory => Page 8 , interrogating and erasing fault memory.
- Press ⇒key.
- Press keys 0 and 6 for the function "End output" and confirm entry with the Q key.
- Carry out a test drive to remove possible residue on Lambda probe and repeat check.

Observe the valid safety precautions when carrying out a road test => Page 77 .

If after a test drive the specifications are not achieved:

- Replace the Lambda probe after catalyst (G130) => Page 55 , item 5 .
- Interrogate fault memory, if necessary, repair any faults and then erase fault memory => Page 8 , interrogating and erasing fault memory.

Protected by copyright. Copying for private or commercial purposes, in part or in whole, is not permitted unless authorised by Volkswagen AG. Volkswagen AG does not guarantee or accept any liability with respect to the correctness of information in this document. Copyright by Volkswagen AG.
satelettronica

- Erase the learnt values and adapt the engine control unit again=> Page 128 .

If the display in display zone 3 remains at a constant value:

- Press ⇒key.
- Press keys 0 and 6 for the function "End output" and confirm entry with the Q key.
- Switch off ignition.
- Continue check according to following table.

Appears on display	Possible fault cause	Fault elimination
Constant 1.10 V	- Short to positive via: - Lambda probe, probe wiring, earth wiring, engine control unit	- Check Lambda probe basic voltage after catalyst => Page 120
Constant 0.00 V	- Short to earth via: - Lambda probe, probe wiring, earth wiring, engine control unit	- Check Lambda probe wiring Lambda probe after catalyst =>Page 121
Constant between 0.39...0.50 V	- Open circuit via: - Lambda probe, probe wiring, earth wiring, engine control unit	

Checking basic voltage for Lambda probe after catalyst

- Remove noise insulation tray.

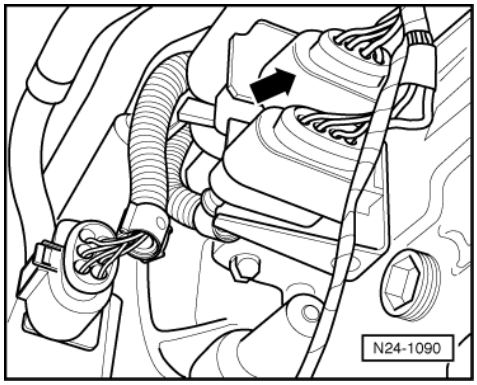

- -> Separate 4-pin connector (black) to Lambda probe after catalyst (G130) -arrow-.

Protected by copyright. Copying for private or commercial purposes, in part or in whole, is not permitted unless authorised by Volkswagen AG. Volkswagen AG does not guarantee or accept any liability with respect to the correctness of information in this document. Copyright by Volkswagen AG.
satelettronica

Volkswagen AG does not guarantee or accept any liability with respect to the correctness of information in this document. Copyright by Volkswagen AG. Protected by copyright. Copying for private or commercial purposes, in part or in whole, is not permitted unless authorised by Volkswagen AG.

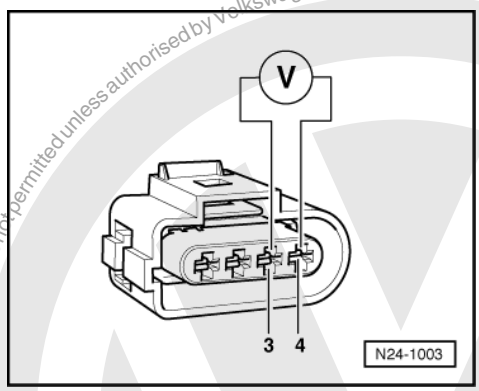

- -> Connect multimeter using aux. cables from V.A.G 1594 to measure voltage at contacts 3 + 4 (connector to engine control unit).
- Start engine and measure the basic voltage.
  Specification: 0.39...0.50 V
- Switch off ignition.

If the specification is not obtained:

- Check Lambda probe wiring of Lambda probe after catalyst
  => Page 121

If the specification is obtained:

- Replace the Lambda probe after catalyst (G130) => Page 55 , item 5 .
- Interrogate fault memory, if necessary, repair any faults and then erase fault memory => Page 8 , interrogating and erasing fault memory.
- Erase the learnt values and adapt the engine control unit again=> Page 128 .

Checking Lambda probe wiring for Lambda probe after catalyst

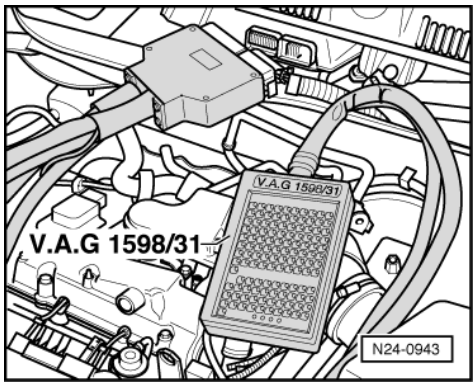

- -> Connect test box V.A.G 1598/31 to control unit wiring harness. The engine control unit remains disconnected.
- Remove noise insulation tray.

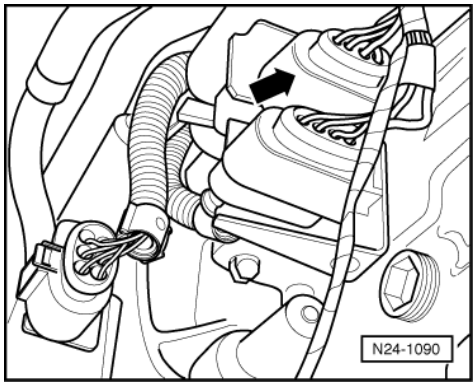

satelettronica

- -> Separate 4-pin connector (black) to Lambda probe after catalyst (G130) -arrow-.

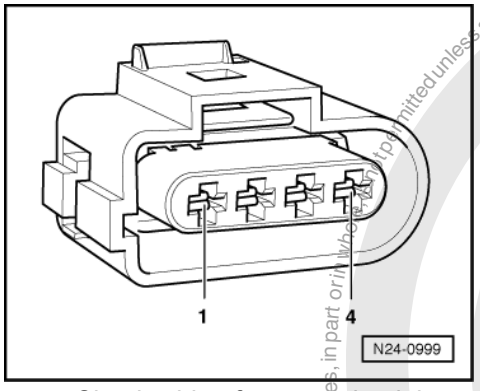

- -> Check wiring for open circuit between test box and 4-pin connector referring to current flow diagram.
  Contact 3 and test box socket 35
  Contact 4 and test box socket 16
  Wire resistance: max. 1.5 ω
- Additionally check wiring at 4-pin connector for short to one another.
  Specification: ∞ω

If no fault is detected in the wiring:

- Replace the Lambda probe after catalyst (G130) => Page 55 , item 5 .

- Interrogate fault memory, if necessary, repair any faults and then erase fault memory => Page 8 , interrogating and erasing fault memory.
- Erase the learnt values and adapt the engine control unit again=> Page 128

3.5 - Checking engine operating mode

Note:

Checks whether engine control unit recognises the engine operating modes idling, overrun, part throttle, enrichment, full throttle.

Special tools, workshop equipment, testers, measuring instruments and auxiliary items required

◆ Fault reader V.A.G 1551 (or vehicle system tester V.A.G 1552) with cable V.A.G 1551/3

Test conditions

• Coolant temperature must be at least 80 °C, =>display group 04, display zone 3.

Test sequence

- Connect fault reader V.A.G 1551 (V.A.G 1552). Start engine and select "Address word" 01 of engine control unit. When doing this the engine must be running at idling speed.
  (Connecting fault reader and selecting engine control unit => Page 4 .)

-> Indicated on display:

```
Rapid data transfer      HELP
Select function XXX
```

- Press keys 0 and 8 for the function "Read measured value block" and confirm entry with Q key.

-> Indicated on display:

```
Read measured value block
Input display group number XXX
```

Protected by copyright. Copyright by Volkswagen AG. Volkswagen AG, Wolfsburg AG does not guarantee or accept any liability with respect to the correctness of information in this document. Copyright by Volkswagen AG, in part or in whole is not permitted unless authorised by Volkswagen AG. Volkswagen AG, Wolfsburg AG does not guarantee or accept any liability with respect to the correctness of information in this document. Copyright by Volkswagen AG.

satelettronica

- Press keys 0, 0 and 5 for "Display group number 5" and confirm entry with Q key.

-> Indicated on display:
(1...4 = Display zones)

```
Read measured value block 5
     1     2     3     4
```

- Check whether the control unit recognises the operating mode (display zone 4):

◆ Idling:

As long as the engine is running at idling speed idling must be displayed
Display: Idling

◆ Overrun mode:

- Increase engine speed to above 3000 rpm.
- Quickly release accelerator pedal.

As long as the engine speed is above 1400 rpm overrun must be displayed
Display: Overrun

Note:

Below 1400 rpm idling speed will be recognised.

◆ Part throttle:

- Rev up evenly.

As long as the engine is being revved up evenly, part throttle must be displayed
Display: Part throt.

◆ Enrichment:

- Floor accelerator pedal (onto throttle valve stop).

Acceleration enrichment must be displayed briefly
Display: Enrichment

◆ Full throttle:

- Floor accelerator pedal (onto throttle valve stop).

Full throttle must be displayed briefly
Display: Full throttle

Note:

A test drive may have to be performed to show "Full throttle" in display.

Observe the valid safety precautions when carrying out a road test => Page 77

- Press ⇒key.
- Press keys 0 and 6 for the function "End output" and confirm entry with the Q key.
- Switch off ignition.

If the specifications are not attained:

- Interrogate fault memory, if necessary, repair any faults and then erase fault memory => Page 8 , interrogating and erasing fault memory.
- Check throttle valve control part

Reproduced by copyright. Copyright by Volkswagen AG. Copying for private or commercial purposes, in part or in whole, is not permitted unless authorised by Volkswagen AG. Volkswagen AG does not guarantee or accept any liability with respect to the correctness of information in this document.
satelettronica

=> Page 85 .

4 - Engine control unit

4.1 - Engine control unit

4.2 - Function

The engine control unit, after evaluating the input signals, regulates the injection, throttle valve control part, ignition, activated charcoal filter solenoid valve 1, governed speed, overrun as well as self-diagnosis.

4.3 - Checking control unit voltage supply

Special tools, workshop equipment, testers, measuring instruments and auxiliary items required

- Hand multimeter V.A.G 1526 or multimeter V.A.G 1715
- Fault reader V.A.G 1551 (or vehicle system tester V.A.G 1552) with cable V.A.G 1551/3
- Adapter set V.A.G 1594
- Test box V.A.G 1598/31
- Current flow diagram

Check conditions

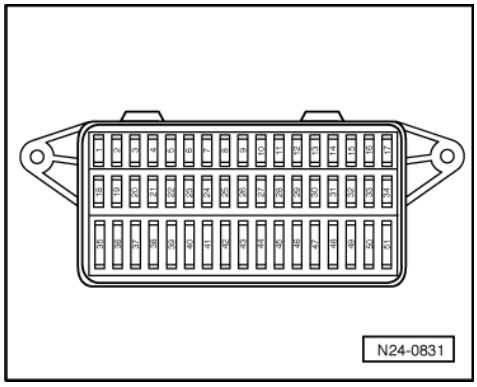

- -> Fuses 13 and 36 must be OK.
- Earth connection in plenum chamber OK.
- The battery voltage must be at least 11.5 V.
- All electrical consumers, e.g. lights and rear window heating must be switched off.
- If the vehicle is equipped with an air conditioning system, this must be switched off.
- Alternator OK, checking:

=> Current flow diagrams, Electrical fault finding and Fitting locations

Test sequence

- Connect fault reader V.A.G 1551 (V.A.G 1552). Start engine and select "Address word" 01 of engine control unit. When doing this the engine must be running at idling speed.
  (Connecting fault reader and selecting engine control unit => Page 4 .)

-> Indicated on display:

```
Rapid data transfer     HELP
Select function XXX
```

Protected by copyright. Copyright by Volkswagen AG. Volkswagen AG does not guarantee or accept any liability with respect to the correctness of information in this document. Copyright by Volkswagen AG. Reproduction, in whole or in part, is not permitted unless authorised by Volkswagen AG. Volkswagen AG does not guarantee or accept any liability with respect to the correctness of information in this document. Copyright by Volkswagen AG.
satelettronica

- Press keys 0 and 8 for the function "Read measured value block" and confirm entry with Q key.

-> Indicated on display:

```
Read measured value block
Input display group number XXX
```

- Press keys 0, 0 and 4 for "Display group number 4" and confirm entry with Q key.

-> Indicated on display:
(1...4 = Display zones)

```
Read measured value block 4
     1     2     3     4
```

- Read off figure displayed in display zone 2.
  Specification: At least 11.5 V
- Press the ⇒key.
- Press keys 0 and 6 for the "End output" function and confirm input with the Q key.

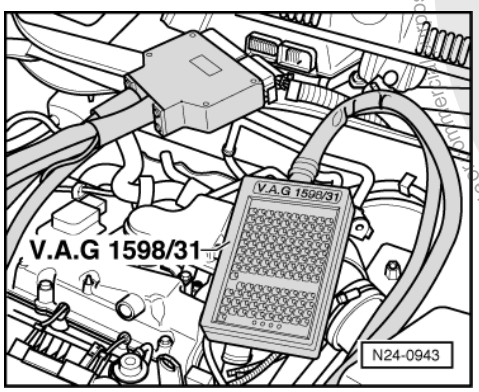

- Switch off ignition.

If the specification is not attained:

- -> Connect test box V.A.G 1598/31 to control unit wiring harness. The engine control unit remains disconnected.

Checking voltage supply terminal 30

- Measure voltage supply with multimeter and aux. cables from V.A.G 1594 between test box sockets 1 + 62 and 2 + 62:
  Specification: min. 11.5 V

If the specification is not attained:

- Check wiring to fuse carrier and earth connection of engine control unit using current flow diagram:

=> Current flow diagrams, Electrical fault finding and Fitting locations

Checking voltage supply terminal 15

- Measure voltage supply with multimeter and aux. cables from V.A.G 1594 between test box sockets 1 + 3 and 2 + 3:
- Switch on ignition.
  Specification: min. 11.5 V

If the specification is not attained:

- Check wiring to fuse carrier and earth connection of engine control unit using current flow diagram:

=> Current flow diagrams, Electrical fault finding and Fitting locations

Protected by copyright. Copying for private and commercial purposes, in part or in whole, is not permitted unless authorised by Volkswagen AG. Volkswagen AG does not guarantee or accept any liability with respect to the correctness of information in this document. Copyright by Volkswagen AG.
satelettronica

4.4 - Replacing engine control unit

Special tools, workshop equipment, testers, measuring instruments and auxiliary items required

- Fault reader V.A.G 1551 with cable V.A.G 1551/3

Removing

- First print out the control unit identification and thereby the previous control unit coding as follows:
- Connect the fault reader V.A.G 1551 (V.A.G 1552). Then switch ignition on and select engine control unit with the "Address word" 01.
  (Connecting fault reader and selecting engine control unit => Page 4 .)

-> On the display the control unit identification and coding are displayed, e.g.:

```
036906033A 1.6l/4V SIMOS3 00HS3148
Coding 00031     WSC XXXXX
```

- Print out the control unit identification by pressing the fault reader print button.
- Press the ⇒key.
- Press keys 0 and 6 for the function "End output" and confirm entry with the Q key.

-> Indicated on display:

```
Rapid data transfer      HELP
Select function XXX
```

- Switch off ignition.
- Remove windscreen wiper arms and the cover for plenum chamber:

=> Electrical system; Repair group 92; windscreen wiper system; removing and installing windscreen wiper system windscreen wiper system removing and installing windscreen wiper system

- Release connector from control unit and pull off.

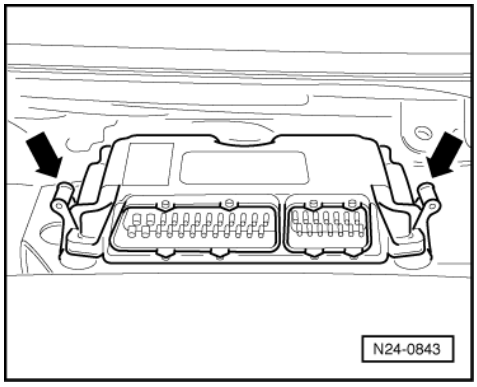

- -> Unclip the control unit from the retaining frame -arrows-.

Installing

- Place the new control unit into the retaining frame.
- Install control unit connector and lock.
- Check the previous coding and the coding of the new control unit => Page 127 .
- Erase the learnt values and adapt the engine control unit again=> Page 128 .

Engine code: ARC

- Adapt new control unit to the electronic immobilizer => Page 130

Volkswagen AG. Volkswagen AG does not guarantee or accept any liability with respect to the correctness of information in this document. Copyright by Volkswagen AG. Reproduced by copyright. Copying for private or commercial purposes, in whole, is not permitted unless authorised by Volkswagen AG.
satelettronica

Engine code: AVY

=> Electrical system; Repair group 01; Immobilizer self-diagnosis; Adaption following renewal of engine control unit Immobilizer self-diagnosis Adaption following renewal of engine control unit

- Interrogate fault memory, if necessary, repair any faults and then erase fault memory => Page 8 , interrogating and erasing fault memory.
- Perform idling speed check
  => Page 112 .
- Carry out test drive.

  During the road test the following operating conditions must be fulfilled:
  - The coolant temperature must exceed 80 °C .
  - When the temperature is reached, the operating conditions
    Idling
    Part throttle
    Enrichment
    Full throttle
    Overrun
    must be attained several times.

- Again interrogate the control unit fault memory.

4.5 - Coding engine control unit

Notes:

- A 5-character code must always be displayed during the control unit identification.
- Read measured value block 125 to see which control units are connected to engine control unit via data bus =>Page 53 , Evaluating measured value block, display groups 120...129 -Communication.
- The control unit must be recoded if the vehicle relevant coding is not displayed or the control unit has been renewed.

Special tools, workshop equipment, testers, measuring instruments and auxiliary items required

- Fault reader V.A.G 1551 with cable V.A.G 1551/3

Test conditions

- The coolant temperature should only be a maximum of 80 °C, =>display group 04, display zone 3

Work sequence

- Connect the fault reader V.A.G 1551 (V.A.G 1552). Then switch ignition on and select engine control unit with the "Address word" 01.
  (Connecting fault reader and selecting engine control unit => Page 4 .)

-> Indicated on display:

```
Rapid data transfer     HELP
Select function XXX
```

- Press keys 0 and 7 for the function "Code control unit" and confirm entry with Q key.

-> Indicated on display:

```
Coding control unit     Q
Enter code number XXXXX     (0-32000)
```

- Enter the relevant code number for this vehicle and confirm with Q key.

  Coding variations for engine control unit => Page 128 .

-> On the display the control unit identification and coding are displayed, e.g.:

Protected by copyright. Copying for private or commercial purposes, in part or in whole, is not permitted unless authorised by Volkswagen AG. Volkswagen AG does not guarantee or accept any liability with respect to the correctness of information in this document. Copyright by Volkswagen AG.
satelettronica

```
036906033A 1.6l/4V SIMOS3 00HS3148
Coding 00031     WSC XXXXX
```

- Press the ⇒key.
- Press keys 0 and 6 for the "End output" function and confirm input with the Q key.
- Switch off ignition and wait for control unit run-on to end (approx. 25 seconds).

-> Indicated on display when a non-authorised code number has been entered.

```
Function is not recognised or cannot
□
be performed at the moment.
```

Note:

The engine control unit doesn't store the entered code (shown on display) until ignition has been switched off and control unit run-on has ended (25 seconds). Incorrect coding could lead to:

- Engine running faults (gear change jerks, load change jerks, etc.)
- Increased fuel consumption
- Increased exhaust gas emissions
- Faults stored in fault memory which are not actually present
- Functions will not be performed (Lambda regulation, activation of the activated charcoal filter system, etc.).

4.6 - Coding variations of engine control unit

1st position: Vehicle code	2nd position: Emissions code	3rd position: Special code	4th position: CAN data bus code	5th position: Gearbox code
0 = No code	0 = No code	0 = No code	0 = No code	0 = No code
1 = ---	1 = ---	1 = ---	1 = ABS	1 = 5-speed manual gearbox
2 = ---	2 = ---	2 = ---	2 = Airbag	2 = 6-speed manual gearbox
3 = ---	3 = ---	3 = ---	3 = ABS and airbag	3 = Automatic gearbox
4 = ---	4 = ---	4 = ---	4 = ---	4 = ---
5 = ---	5 = ---	5 = ---	5 = ---	5 = ---

The code number is compiled as shown in the following example:

1st position: Vehicle code (no code at present)	0				
2nd position: Emissions code (no code at present)		0			
3rd position: Special code (no code a present)			0		
4th position: CAN data bus code (ABS and airbag)				3	
5th position: Gearbox code (5-speed manual gearbox)					1
Code number:	0	0	0	3	1

4.7 - Erasing learnt values and adapting engine control unit to throttle valve control part

Function

First erase old learnt values. This is required to bring the learnt value which may possibly be at the limit stop back to a neutral value. The engine control unit learns various positions of the throttle valve part during adaption when the ignition is switched on but the engine is not running. These positions are stored in the control unit.

Protected by copyright. Copyright by Volkswagen AG. Volkswagen AG does not guarantee or accept any liability with respect to the correctness of information in this document. Copyright by Volkswagen AG. Reproduction prohibited unless authorised by Volkswagen AG. Copyright by Volkswagen AG. Volkswagen AG does not guarantee or accept any liability with respect to the correctness of information in this document. Copyright by Volkswagen AG. Reproduction prohibited unless authorised by Volkswagen AG. Copyright by Volkswagen AG. Volkswagen AG does not guarantee or accept any liability with respect to the correctness of information in this document. Copyright by Volkswagen AG. Reproduction prohibited unless authorised by Volkswagen AG. Copyright by Volkswagen AG. Volkswagen AG does not guarantee or accept any liability with respect to the correctness of information in this document. Copyright by Volkswagen AG. Reproduction prohibited unless authorised by Volkswagen AG. Copyright by Volkswagen AG. Volkswagen AG does not guarantee or accept any liability with respect to the correctness of information in this document. Copyright by Volkswagen AG. Reproduction prohibited unless authorised by Volkswagen AG. Copyright by Volkswagen AG. Volkswagen AG does not guarantee or accept any liability with respect to the correctness of information in this document. Copyright by Volkswagen AG. Reproduction prohibited unless authorised by Volkswagen AG. Copyright by Volkswagen AG. Volkswagen AG does not guarantee or accept any liability with respect to the correctness of information in this document. Copyright by Volkswagen AG. Reproduction prohibited unless authorised by Volkswagen AG. Copyright by Volkswagen AG. Volkswagen AG does not guarantee or accept any liability with respect to the correctness of information in this document. Copyright by Volkswagen AG. Reproduction prohibited unless authorised by Volkswagen AG. Copyright by Volkswagen AG. Volkswagen AG does not guarantee or accept any liability with respect to the correctness of information in this document. Copyright by Volkswagen AG. Reproduction prohibited unless authorised by Volkswagen AG.

satelettronica

Adapting sequence must be performed if:

- The throttle valve control unit is removed and installed
- If when installing another engine another throttle valve control unit is installed
- The throttle valve control unit is renewed
- The engine control unit is replaced
- Defective components such as Lambda probes and injectors have been replaced.

Special tools, workshop equipment, testers, measuring instruments and auxiliary items required

- Fault reader V.A.G 1551 (or vehicle system tester V.A.G 1552) with cable V.A.G 1551/3

Check conditions

- No faults must be stored in fault memory => Page 8 , interrogating and erasing fault memory.
- The battery voltage must be at least 11.5 V.
- All electrical consumers, e.g. lights and rear window heating must be switched off.
- If the vehicle is equipped with an air conditioning system, this must be switched off.
- The throttle valve must be at idling speed position (The accelerator must not be operated during the test).
- Coolant temperature must be 5...115 °C =>display group 04, display zone 3.

Work sequence

- Connect the fault reader V.A.G 1551 (V.A.G 1552). Then switch ignition on and select engine control unit with the "Address word" 01.
  (Connecting fault reader and selecting engine control unit => Page 4 .)

-> Indicated on display:

```
Rapid data transfer      HELP
Select function XXX
```

- Press keys 1 and 0 for function "Adaption" and confirm entry with Q key.

-> Indicated on display:

```
Adaption
Feed in channel number XX
```

- Press key 0 twice for "Channel number 0" and confirm entry with Q key.

-> Indicated on display:

```
Adaption      Q
Erase learnt values?
```

- Confirm input with Q key.

-> Indicated on display:

```
Adaption
Learnt values have been erased
```

- Press the ⇒key.

-> Indicated on display:

```
Rapid data transfer      HELP
Select function XXX
```

- Press keys 0 and 4 for the function "Introduction of basic setting" and confirm entry with Q key.

-> Indicated on display:

```
Basic setting
Input display group number XXX
```

- Press keys 0, 6 and 0 for the "Display group number 60" and confirm entry with Q key.

Protected by copyright. Copying for private or commercial purposes, in part or in whole, is not permitted unless authorised by Volkswagen AG. Volkswagen AG does not guarantee or accept any liability with respect to the correctness of information in this document. Copyright by Volkswagen AG.

satelettronica

-> Indicated on display:
(1...4 = display zones)

```
System in basic setting      60
     xxx.x %     xxx.x %     x     ADP.
runs
```

After pressing the Q key the throttle valve positioner is switched so that it is not supplied with voltage at start of test.

In this condition the throttle valve is pulled into an emergency running position by a mechanical spring in the throttle valve control part. The values that both angle senders provide in the emergency running position are stored by the engine control unit.

Thereafter the throttle valve is opened a predetermined value. If this value is achieved, the throttle valve is again switched so that it is not supplied with voltage. Now the mechanical spring must pull the throttle valve to the previously learnt emergency running position within a predetermined period (spring test).

Then the throttle valve is closed by the throttle valve positioner and the values, which are supplied by the angle senders in the throttle valve control part are stored by the engine control unit.

If the engine control unit switches the throttle valve positioner so that it is without voltage during normal operation, this is indicated by the increased and hunting idling speed. The engine reacts slowly to accelerator changes.

-> Indicated on display:
(1...4 = display zones)

```
System in basic setting      60
     xx.x %     xx.x %     0     ADP. OK
```

Adapting has been performed successfully.

- End basic setting of throttle valve control part by pressing⇒ key.

-> Indicated on display:

```
Rapid data transfer      HELP
Select function XXX
```

- Press keys 0 and 6 for the function "End output" and confirm entry with the Q key.

To store the values:

- Switch off ignition and wait for control unit run-on to end (approx. 25 seconds).

Note:

If the basic setting of the control unit is interrupted, the cause could be one of the following:

- The test conditions were not fulfilled.
- Throttle valve control part or wiring is defective => Page 85 Checking throttle valve control part.

After an interruption a fault is stored in fault memory. When next switching on ignition the basic setting is automatically performed again.

4.8 - Adapting engine control unit to electronic immobilizer

Engine code: AVY

=> Electrical system; Repair group 01; Immobilizer self-diagnosis; Adaption following renewal of engine control unit Immobilizer self-diagnosis Adaption following renewal of engine control unit

satelettronica

Engine code: ARC

Special tools, workshop equipment, testers, measuring instruments and auxiliary items required

- Fault reader V.A.G 1551 or vehicle system tester V.A.G 1552 with cable V.A.G 1551/3

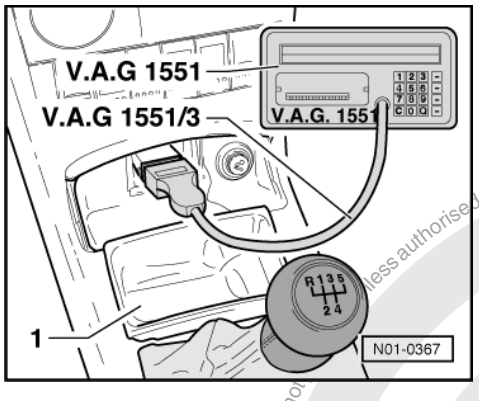

Conditions

- Authorized vehicle key required.

Work sequence

- -> Remove ash tray -1-.
- Connect fault reader V.A.G 1551 or vehicle system tester V.A.G 1552 with cable V.A.G 1551/3.
- Switch on ignition.
- Operate fault reader or vehicle system tester taking into account the information on the display:
- Press key 1 for "Rapid data transfer".
- Press keys 2 and 5 for address word "Immobilizer" and confirm entry with Q key.
- Press the ⇒key.

-> Indicated on display:

```
Rapid data transfer      HELP
Select function XXX
```

- Press keys 1 and 0 for function "Adaption" and confirm entry with Q key.

-> Indicated on display:

```
Adaption
Feed in channel number XX
```

- Press key 0 twice for "Channel number 0" and confirm entry with Q key.

-> Indicated on display:

```
Adaption     Q
Erase learnt values?
```

- Confirm input with Q key.

-> Indicated on display:

```
Adaption
Learnt values have been erased
```

- Conclude adaption by pressing ⇒ key.
- Press keys 0 and 6 for the function "End output" and confirm entry with the Q key.
- Switch off ignition.

Protected by copyright. Copyright by Volkswagen AG. Copying for private or commercial purposes, in part or in whole, is not permitted unless authorised by Volkswagen AG. Volkswagen AG does not guarantee or accept any liability with respect to the correctness of information in this document.
satelettronica

Note:

The identity of the engine control unit is read into the immobilizer control unit when next switching the ignition on.

5 - Checking additional signals

5.1 - Checking additional signals

5.2 - Checking speed signal

Special tools, workshop equipment, testers, measuring instruments and auxiliary items required

- Hand multimeter V.A.G 1526 or multimeter V.A.G 1715
- Fault reader V.A.G 1551 (or vehicle system tester V.A.G 1552) with cable V.A.G 1551/3
- Adapter set V.A.G 1594
- Test box V.A.G 1598/31
- Current flow diagram

Check conditions

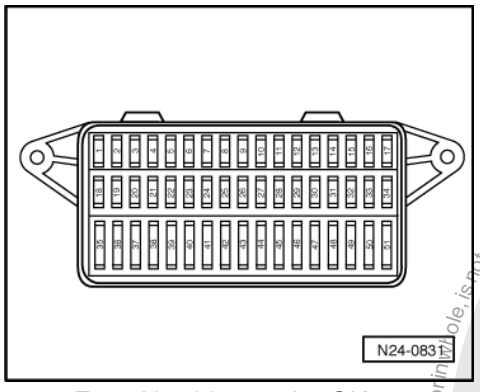

- -> Fuse No. 36 must be OK.
- The battery voltage must be at least 11.5 V.
- All electrical consumers, e.g. lights and rear window heating must be switched off.
- If the vehicle is equipped with an air conditioning system, this must be switched off.
- No faults must be stored in fault memory => Page 8 , interrogating and erasing fault memory.
- Speedometer must be OK., checking speedometer:

=> Electrical system; Repair group 90

Test sequence

Note:

To check the speed signal the vehicle must be driven. To do this a second person is necessary.

Warning! Secure fault reader to rear seat and operate from this position.

Observe the valid safety precautions when carrying out a road test => Page 77 .

- Connect fault reader V.A.G 1551 (V.A.G 1552). Start engine and select "Address word" 01 of engine control unit. When doing this the engine must be running at idling speed.

Protected by copyright. Copyright by Volkswagen AG. Copying for private or commercial purposes, in part or in whole, is not permitted unless authorised by Volkswagen AG. Volkswagen AG does not guarantee or accept any liability with respect to the correctness of information in this document.
satelettronica

(Connecting fault reader and selecting engine control unit => Page 4 .)

-> Indicated on display:

```
Rapid data transfer      HELP
Select function XXX
```

- Press keys 0 and 8 for the function "Read measured value block" and confirm entry with Q key.

-> Indicated on display:

```
Read measured value block
Input display group number XXX
```

- Press keys 0, 0 and 5 for "Display group number 5" and confirm entry with Q key.

-> Indicated on display:
(1...4 = Display zones)

```
Read measured value block 5
     1     2     3     4
```

- Carry out test drive with a 2nd person to observe display.
- Observe figure displayed in display zone 3:
  Specification: approx. driven speed
- Drive slower. The displayed value must decrease.
- Press the ⇒key.
- Press keys 0 and 6 for the "End output" function and confirm input with the Q key.
- Switch off ignition.

If no speed is indicated or the display values reduce when driving slowly:

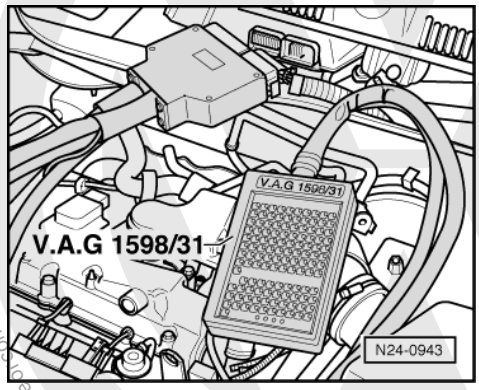

- -> Connect test box V.A.G 1598/31 to control unit wiring harness. The engine control unit remains disconnected.
- Connect multimeter to measure voltage between test box sockets 3 (terminal 15) + 9 (vehicle speed signal).
- Raise front left side of vehicle.
- Switch on ignition.
- Rotate front wheel and observe voltage display.
  Specification: 0.0...at least 4.0 Volt fluctuating

Note:

If necessary, hold the front right wheel to prevent it from turning.

If the display does not fluctuate:

- Check wiring from test box socket 9 to dash panel insert for open or short circuit referring to current flow diagram:

=> Current flow diagrams, Electrical fault finding and Fitting locations

satelettronica

5.3 - Checking engine speed signal

Function

The engine rpm signal output is on contact 22 of engine control unit. Amongst other things the signal is necessary for the rev. counter in dash panel insert.

Special tools, workshop equipment, testers, measuring instruments and auxiliary items required

- Hand multimeter V.A.G 1526 or multimeter V.A.G 1715
- Adapter set V.A.G 1594
- Test box V.A.G 1598/31
- Current flow diagram

Test conditions

- No faults must be stored in fault memory => Page 8 , interrogating and erasing fault memory.

Test sequence

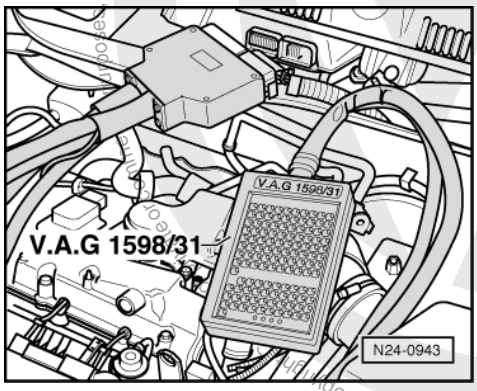

- -> Connect test box V.A.G 1598/31 to control unit wiring harness. The engine control unit remains disconnected.
- Check wiring from test box contact 22 to dash panel insert for open circuit referring to current flow diagram:

=> Current flow diagrams, Electrical fault finding and Fitting locations

5.4 - Checking signal from/to air conditioning system

Function

Air conditioner compressor signal:
Just before the air conditioner compressor is switched on, the voltage is sent to the engine control unit. The signal ensures that once the air conditioner is switched on, idling speed will not drop drastically.

Switching off air conditioner compressor:
In order that engine performance is not impaired when accelerating, the A/C compressor is switched off briefly when accelerating from start or from low engine revs.

Air conditioner readiness:
When the air conditioner is switched on the engine control unit receives the information: air conditioning system is switched on. This "PWM signal" (pulse width modulation) can be used to pre-control the idling speed.

Special tools, workshop equipment, testers, measuring instruments and auxiliary items required

- Hand multimeter V.A.G 1526 or multimeter V.A.G 1715
- Fault reader V.A.G 1551 (or vehicle system tester V.A.G 1552) with cable V.A.G 1551/3
- Adapter set V.A.G 1594
- Test box V.A.G 1598/31

satelettronica

◆ Current flow diagram

Test conditions

- All electrical consumers, e.g. lights and rear window heating must be switched off.
- Air conditioner functioning OK.
- Air conditioner must be switched off
- Vehicle at room temperature (warmer than + 15 °C).
- No faults must be stored in fault memory => Page 8 , interrogating and erasing fault memory.

Test sequence

- Connect fault reader V.A.G 1551 (V.A.G 1552). Start engine and select "Address word" 01 of engine control unit. When doing this the engine must be running at idling speed.
  (Connecting fault reader and selecting engine control unit => Page 4 .)

-> Indicated on display:

```
Rapid data transfer      HELP
Select function XXX
```

- Press keys 0 and 8 for the function "Read measured value block" and confirm entry with Q key.

-> Indicated on display:

```
Read measured value block
Input display group number XXX
```

Checking air conditioner compressor signal and air conditioner switch-off

- Press keys 0, 5 and 0 for "Display group number 50" and confirm entry with Q key.

-> Indicated on display:
(1...4 = Display zones)

```
Read measured value block 50
     1     2    3     4
```

- Check displays in display zones 3 and 4:

  Display in display zone 3:
  Off
  Display in display zone 4:
  Compr.OFF

- Switch on air conditioning system.
- Select lowest temperature and highest blower speed.

  The display in display zone 3 must change to
  on.
  Display in display zone 4 must change to
  Compr.ON.

- Carry out test drive with a 2nd person to observe display.

Observe the valid safety precautions when carrying out a road test => Page 77 .

Note:

A road test is required to test the shut-off function.

- Engage 1st gear and accelerate moderately hard. Then release accelerator pedal.

  The display in display zone 4 must change from
  Compr.ON
  to
  Compr. OFF

Protected by copyright. Copying for private or commercial purposes, in part or in whole, is not permitted unless authorised by Volkswagen AG. Volkswagen AG does not guarantee or accept any liability with respect to the correctness of information in this document. Copyright by Volkswagen AG.
satelettronica

for a few seconds (compressor switch-off when vehicle is accelerating), during which the display in display zone 3 must remain constantly at "on".

- Press the ⇒key.
- Switch off air conditioning system.

If the display changes as described:

- Checking air conditioner readiness => Page 136 .

If the displays do not change as described:

- Press keys 0 and 6 for the "End output" function and confirm input with the Q key.

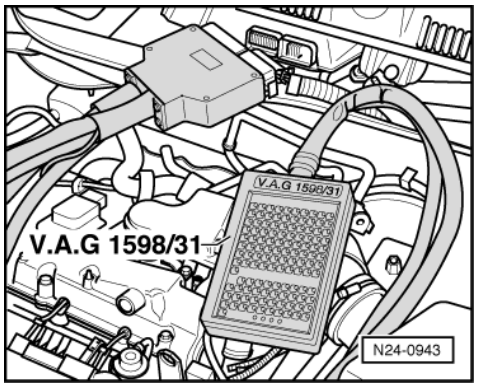

- Switch off ignition.
- -> Connect test box V.A.G 1598/31 to control unit wiring harness. The engine control unit remains disconnected.
- Check wiring between test box sockets 76 and the air conditioner for open circuit using current flow diagram.
  Wire resistance: Max. 1.5 ω
- Check the wire between text box socket 28 and the air conditioner for open circuit using current flow diagram.
  Wire resistance: Max. 1.5 ω

Checking air conditioner readiness

Note:

The engine control unit receives a "PWM signal" from air conditioning system high pressure sender (G65), this allows the idling speed signal to be regulated more precisely.

- Press keys 0 and 8 for the function "Read measured value block" and confirm entry with Q key.

-> Indicated on display:

```
Read measured value block
Input display group number XXX
```

- Press keys 0, 5 and 7 for "Display group number 57" and confirm entry with Q key.

-> Indicated on display:
(1...4 = Display zones)

```
Read measured value block 57
     1      2      3      4
```

- Observe display in display zone 4. It must show
  0...2 %
- Switch on air conditioning system.
- Select lowest temperature and highest blower speed.

  The display in display zone must change to

Protected by copyright. Copyright by Volkswagen AG. Volkswagen AG does not guarantee or accept any liability with respect to the correctness of information in this document. Copyright by Volkswagen AG.
satelettronica

15...80% (fluctuating).

- Press the ⇒key.
- Press keys 0 and 6 for the "End output" function and confirm input with the Q key.
- Switch off ignition.

If the display does not change or remains constantly at 0%:

- Remove noise insulation tray.

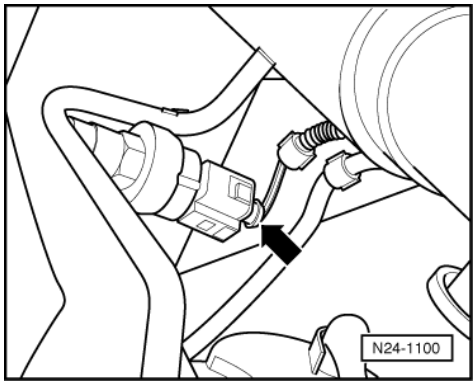

- -> Pull 3-pin connector off air conditioning system high pressure switch (G65) -arrow-.

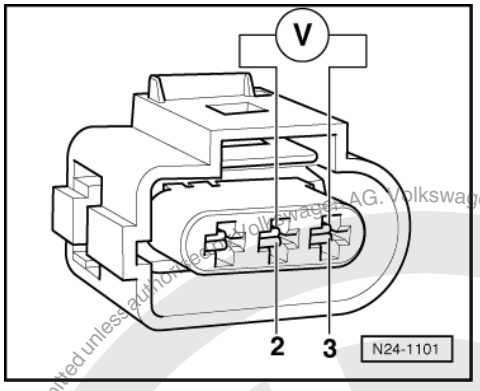

- -> Connect multimeter to measure voltage using aux. cables from V.A.G 1594 to contacts 2 (positive) and 3 (earth) on high pressure sender connector.
- Switch on ignition.
  Specification: min. 11.5 V
- Switch off ignition.

If no voltage is present:

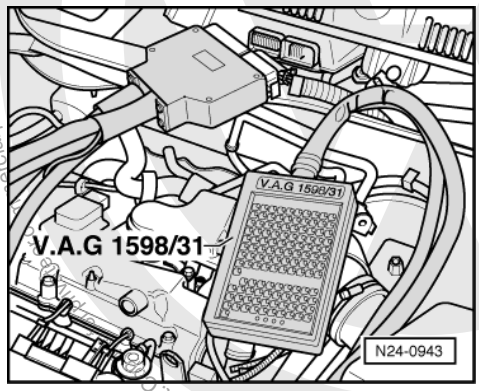

- -> Connect test box V.A.G 1598/31 to control unit wiring harness. The engine control unit remains disconnected.

Protected by copyright. Copyright by Volkswagen AG.
Volkswagen AG does not guarantee or accept any liability with respect to the correctness of information in this document. Copyright by Volkswagen AG.
Reproduction for commercial purposes, in part or in whole, is not permitted unless authorized by Volkswagen AG.
satelettronica

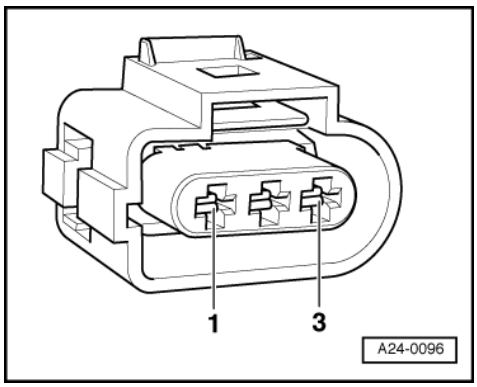

- -> Check wiring for open circuit between test box and 3-pin connector referring to current flow diagram:
  Contact 2 and test box socket 29
  Wire resistance: max. 1.5 ω
- Check wiring additionally for short to vehicle earth or battery positive.
  Specification: ∞ω

If no wiring fault is detected:

- Renew high pressure sender (G65)

=> Heating, Air conditioning; Repair group 87

5.5 - Checking signal from clutch pedal switch

Special tools, workshop equipment, testers, measuring instruments and auxiliary items required

- Hand multimeter V.A.G 1526 or multimeter V.A.G 1715
- Fault reader V.A.G 1551 (or vehicle system tester V.A.G 1552) with cable V.A.G 1551/3
- Adapter set V.A.G 1594
- Test box V.A.G 1598/31
- Current flow diagram

Check conditions

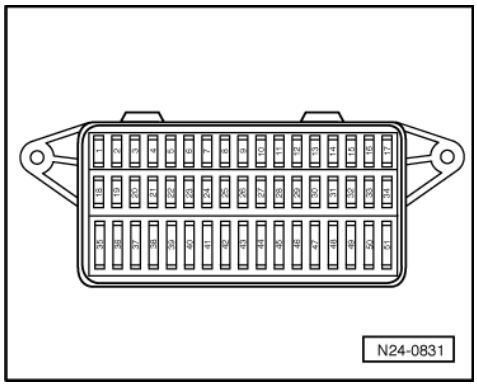

- -> Fuses 24, 31 and 36 must be OK.
- The battery voltage must be at least 11.5 V.

Test sequence

- Connect the fault reader V.A.G 1551 (V.A.G 1552). Then switch ignition on and select engine control unit with the "Address word" 01.
  (Connecting fault reader and selecting engine control unit => Page 4 .)

-> Indicated on display:

satelettronica
Protected by copyright. Copying for private or commercial purposes, in part or in whole, is not permitted unless authorised by Volkswagen AG. Volkswagen AG does not guarantee or accept any liability with respect to the correctness of information in this document. Copyright by Volkswagen AG.

```
Rapid data transfer      HELP
Select function XXX
```

- Press keys 0 and 8 for the function "Read measured value block" and confirm entry with Q key.

-> Indicated on display:

```
Read measured value block
Input display group number XXX
```

- Press keys 0, 6 and 6 for "display group 66" and confirm with Q key.

-> Indicated on display:
(1...4 = Display zones)

```
Read measured value block 66
     1     2     3     4
```

- Observe values displayed in display zone 2 (2nd digit from left = clutch pedal switch).
  Specification: x 0 x x
- Depress clutch pedal fully and observe values in display zone 2.
  Specification: x 1 x x
- Press the ⇒key.
- Press keys 0 and 6 for the "End output" function and confirm input with the Q key.
- Switch off ignition.

If the specification is not obtained:
- Remove cover in footwell (driver's side).

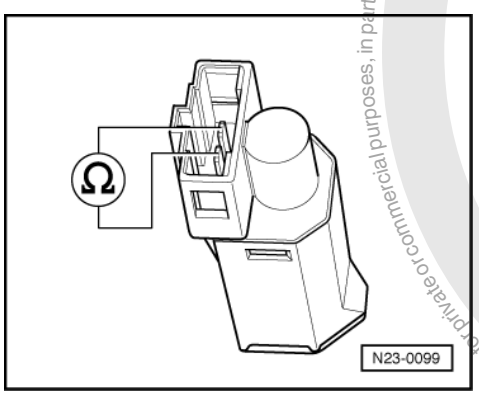

- Pull 2-pin connector off clutch pedal switch.
- -> Measure resistance at switch contacts.
  Specification
  Clutch not depressed: max. 1.5 ω
  Clutch depressed: ∞ω(open circuit)

If the specifications are not obtained:
- Replace clutch pedal switch (F36).
- Interrogate fault memory, if necessary, repair any faults and then erase fault memory => Page 8 , interrogating and erasing fault memory.

If the specifications are obtained:

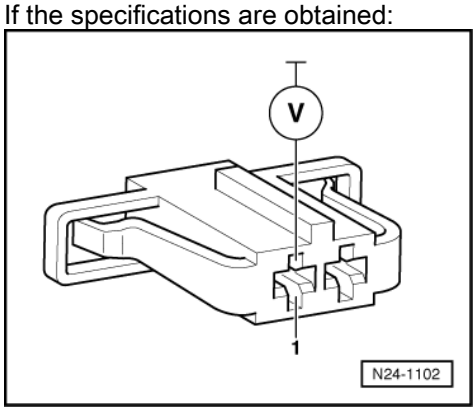

Protected by copyright. Copying for private or commercial purposes, in part or in whole, is not permitted unless authorised by Volkswagen AG. Volkswagen AG does not guarantee or accept any liability with respect to the correctness of information in this document. Copyright by Volkswagen AG.
satelettronica

- -> Connect multimeter to measure voltage with aux. cables from V.A.G 1594 to contact 1 (positive) of clutch pedal connector and earth.
- Switch on ignition.
  Specification: min. 11.5 V

If the specification is not attained:

- Check wire for open circuit between 2-pin connector contact 1 and fuse holder referring to current flow diagram.
  Wire resistance: max. 1.5 ω

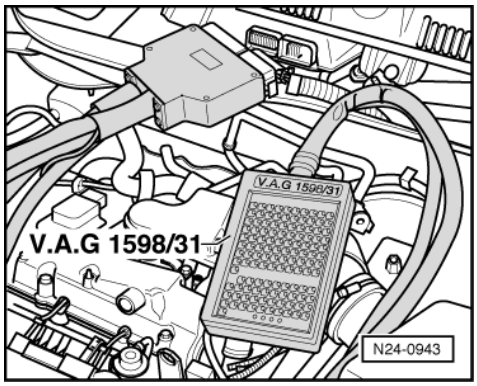

If the specification is obtained:

- -> Connect test box V.A.G 1598/31 to control unit wiring harness. The engine control unit remains disconnected.

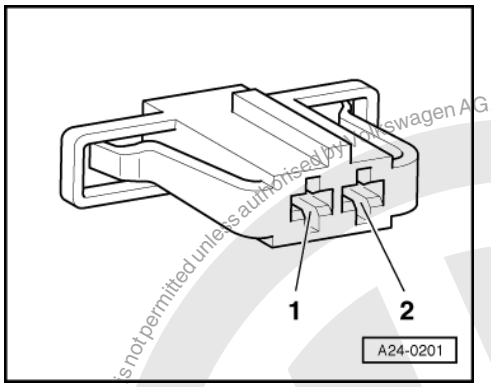

- -> Check wire between test box and 2-pin connector referring to current flow diagram.
  Contact 2 and test box socket 65
  Wire resistance: max. 1.5 ω
- Additionally check wires for short to one another, to vehicle earth and to battery positive.
  Specification: ∞ω

If no fault is detected in the wiring:

- Replace engine control unit
  => Page 126 .

5.6 - Checking signal from brake light switch and brake pedal switch

Special tools, workshop equipment, testers, measuring instruments and auxiliary items required

- Hand multimeter V.A.G 1526 or multimeter V.A.G 1715
- Fault reader V.A.G 1551 (or vehicle system tester V.A.G 1552) with cable V.A.G 1551/3
- Adapter set V.A.G 1594
- Test box V.A.G 1598/31

Protected by copyright. Copying for private or commercial purposes, in part or in whole, is not permitted unless authorised by Volkswagen AG. Volkswagen AG does not guarantee or accept any liability with respect to the correctness of information in this document. Copyright by Volkswagen AG.
satelettronica

- Current flow diagram

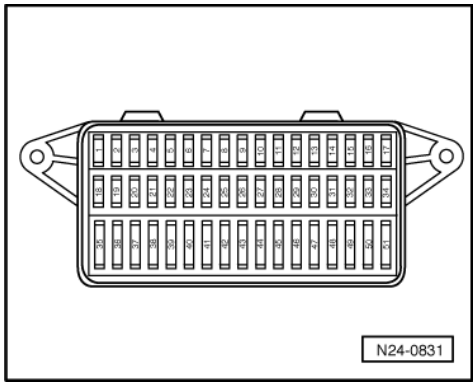

Check conditions

- -> Fuses 15, 24, 31 and 36 must be OK.
- The battery voltage must be at least 11.5 V.

Test sequence

- Connect the fault reader V.A.G 1551 (V.A.G 1552). Then switch ignition on and select engine control unit with the "Address word" 01.
  (Connecting fault reader and selecting engine control unit => Page 4 .)

-> Indicated on display:

```
Rapid data transfer      HELP
Select function XXX
```

- Press keys 0 and 8 for the function "Read measured value block" and confirm entry with Q key.

-> Indicated on display:

```
Read measured value block      HELP
Input display group number XXX
```

- Press keys 0, 6 and 6 for "display group 66" and confirm with Q key.

-> Indicated on display:
(1...4 = Display zones)

```
Read measured value block 66
     1     2     3     4
```

- Observe display in display zone 2
  (3rd and 4th positions from left = brake light switch and brake pedal switch)
  Specification: x x 0 0
- Depress brake pedal fully and observe display in display zone 2.
  Specification: x x 1 1
- Press the ⇒key.
- Press keys 0 and 6 for the "End output" function and confirm input with the Q key.
- Switch off ignition.

If the specification is not obtained:

- Remove cover in footwell (driver's side).

Protected by copyright. Copying for private or commercial purposes, in part or in whole, is not permitted unless authorised by Volkswagen AG. Volkswagen AG does not guarantee or accept any liability with respect to the correctness of information in this document. Copyright by Volkswagen AG.
satelettronica

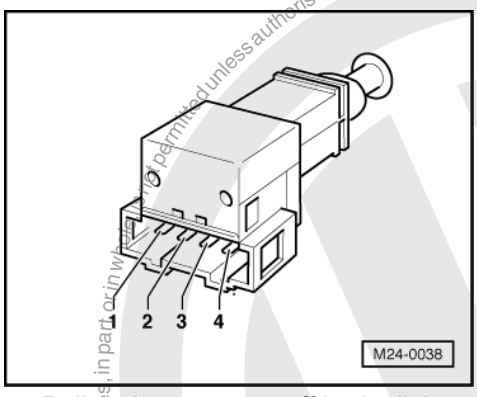

- Pull 4-pin connector off brake light switch and brake pedal switch.
- -> Measure resistance between contacts 1+4 of the switch.
  Specification
  Brake pedal not depressed: ∞ω(open circuit)
  Brake pedal depressed: max. 1.5ω

- Measure resistance between contacts 2+3 of the switch.
  Specification
  Brake pedal not depressed: max. 1.5ω
  Brake pedal depressed:∞ω(open circuit)

If the specifications are not obtained:

- Replace the brake light switch (F) and brake pedal switch(F47).
- Interrogate fault memory, if necessary, repair any faults and then erase fault memory => Page 8 , interrogating and erasing fault memory.

If the specifications are obtained:

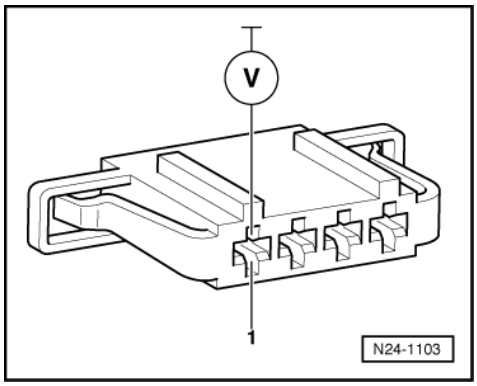

- -> Connect multimeter to measure voltage with aux. cables from V.A.G 1594 to connector contact 1 (terminal 30) and earth.
  Specifications: min. 11.5 V

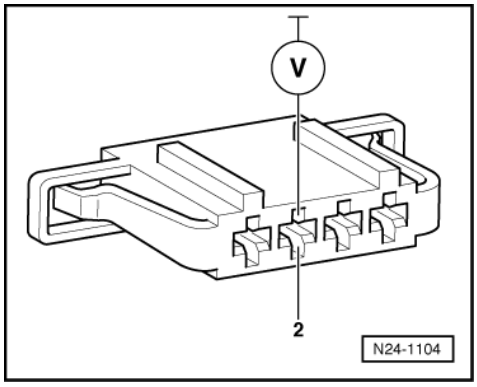

Volkswagen AG. Volkswagen AG does not guarantee or accept any liability with respect to the correctness of information in this document. Copyright by Volkswagen AG.
satelettronica

- -> Connect multimeter to measure voltage with aux. cables from V.A.G 1594 to connector contact 2 (terminal 15) and earth.
- Switch on ignition.
  Specification: min. 11.5 V

If the specifications are not obtained:

- Check wire for open circuit between 4-pin connector contacts 1 or 2 and fuse holder referring to current flow diagram.
  Wire resistance: max. 1.5 ω

If the specifications are obtained:

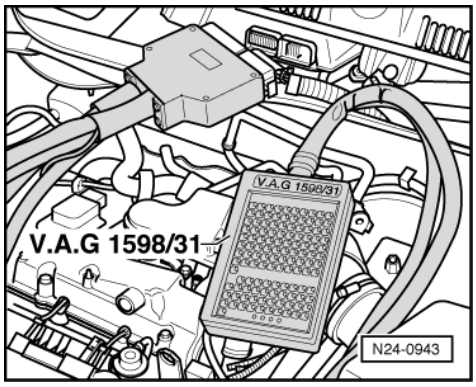

- -> Connect test box V.A.G 1598/31 to control unit wiring harness. The engine control unit remains disconnected.

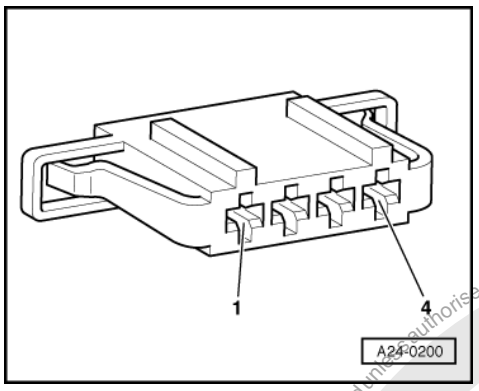

- -> Check wiring for open circuit between test box and 4-pin connector referring to current flow diagram:
  Contact 3 and test box socket 63
  Contact 4 and test box socket 53
  Wire resistance max. 1.5 ω
- Additionally check wires for short to one another, to vehicle earth and to battery positive.
  Specification: ∞ω

If no fault is detected in the wiring:

- Replace engine control unit
  => Page 126 .

5.7 - Checking matching resistor of data bus

Function

The engine control unit communicates with other data bus-compatible control units.

satelettronica
© Copyright by Volkswagen AG. Volkswagen AG does not guarantee or accept any liability with respect to the correctness of information in this document. Copyright by Volkswagen AG. Copying for private or commercial purposes, in part or in whole, is not permitted unless authorised by Volkswagen AG.

The control units are connected via a twisted pair of data bus wires ("high" and "low") and exchange information (messages). Information missing from the data bus will be recognised as a fault by both the engine control unit and other data bus control units.

The data bus requires a matching resistor to function fault free. This central matching resistor is located in the engine control unit.

Test conditions

- A data bus fault has been recognised by the self-diagnosis.

Special tools, workshop equipment, testers, measuring instruments and auxiliary items required

- Test box V.A.G 1598/31
- Hand multimeter V.A.G 1526 or multimeter V.A.G 1715
- Adapter set V.A.G 1594
- Current flow diagram

Test sequence

- Switch off ignition.
- Unlock the engine control unit connector and pull it off.
- Connect test box V.A.G 1598/31 to engine control unit. The control unit wiring harness is not connected by this action.
- Check centralized matching resistor in engine control unit.
- To do this, perform a resistance measurement between
  test box sockets 20 and 21:
  Specification: 60.0...72.0 ω

If the resistance measurement is outside the specified range:

- Renew engine control unit => Page 126.

If the resistance value is within the specified range:

- Repair the fault:

=> Current flow diagrams, Electrical fault finding and Fitting locations binder

satelettronica

28 - Ignition system

Protected by copyright. Copyright by Volkswagen AG. Volkswagen AG does not guarantee or accept any liability with respect to the correctness of information in this document. Copyright by Volkswagen AG. Copying for private or commercial purposes, in part or in whole, is not permitted unless authorised by Volkswagen AG.

1 - Servicing ignition system

1.1 - Servicing ignition system

1.2 - General notes on ignition system

- Only the components which specifically relate to the ignition system are dealt with here. For the other components of the injection and ignition system => Repair group 24.
- The engine control unit is equipped with self diagnosis.
- Components marked with * are checked via the self diagnosis => Page 8 , interrogating and erasing fault memory.
- For trouble-free operation of the electrical components a voltage of at least 11.5 V is necessary.
- Before carrying out repairs and for fault finding, interrogate fault memory => Page 8 , interrogating and erasing fault memory
- During some checks it is possible that the control unit will recognise and store a fault. Therefore after completing all checks and repairs the fault memory must be interrogated and if necessary erased. => Page 8 , interrogating and erasing fault memory

- If the engine starts, runs for a short period and then stops, after fault finding, repairs or component tests, then the fault may lie with the immobilizer which is blocking the engine control unit. The fault memory must be interrogated and if necessary the control unit matched => Page 130 .

Safety precautions => Page 148

Test data, spark plugs => Page 149

satelettronica

1.3 - Removing and installing parts of the ignition system

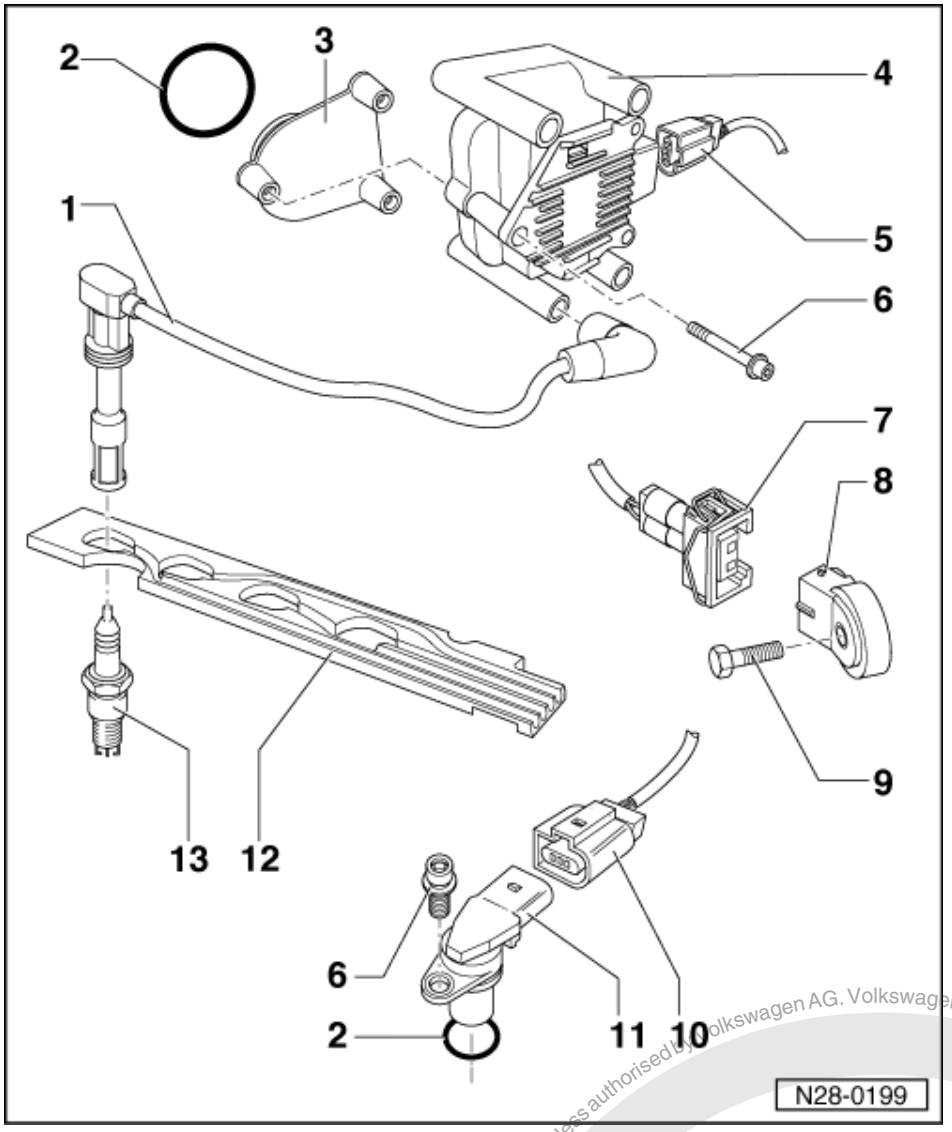

Note:

Engine control unit with connectors => Page 66 , item 25 .*

1 H.T. cable
- Resistance 4.0...8.0 kω
- With suppression connector and spark plug connector

2 O-ring
- Renew if damaged

3 Inlet camshaft cover

Protected by copyright. Copying for private or commercial purposes, in part or in whole, is not permitted unless authorised by Volkswagen AG. Volkswagen AG does not guarantee or accept any liability with respect to the correctness of information in this document. Copyright by Volkswagen AG.
satelettronica

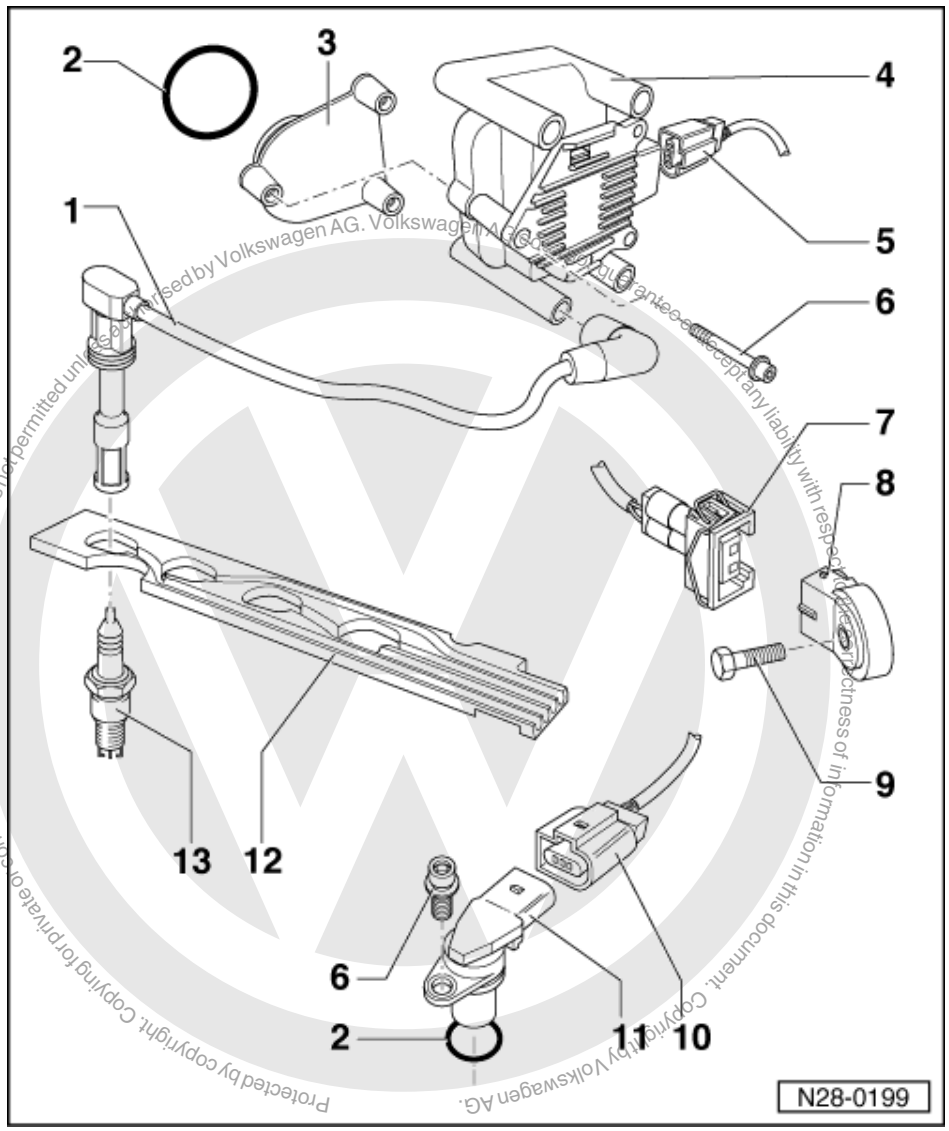

4 Ignition transformer (N152)
- Fitting location => Page 54 , engine compartment overview
- Marked for H.T. cables:
  A = Cylinder 1
  B = Cylinder 2
  C = Cylinder 3
  D = Cylinder 4
- With output stage (N122)
- Checking => Page 151

5 Connector
- Black, 4 pin
- For ignition transformer (N152)

6 10 Nm

7 Connector
- Black, 2-pin
- For knock sensor 1 (G61)

8 Knock sensor 1 (G61)*
- Fitting location => Page 54 , engine compartment overview
- Checking => Page 155

satelettronica

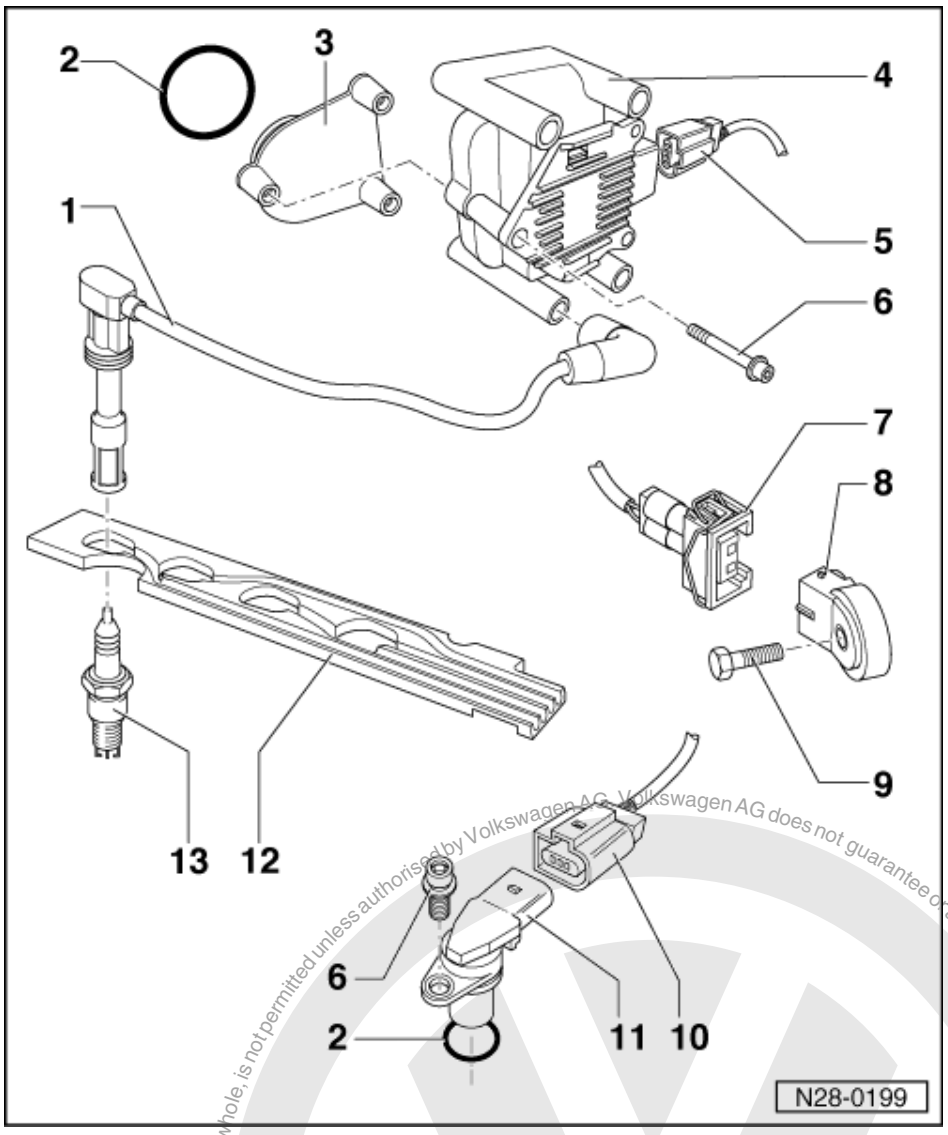

9 20 Nm
- Tightening torque influences the function of the knock sensor

10 Connector
- Black, 3-pin
- For Hall sender (G40)

11 Hall sender (G40)*
- Fitting location => Page 54 , engine compartment overview
- Checking => Page 150

12 H.T. cable guide

13 Spark plug, 30 Nm
- Type and electrode gap
  => Page 149 , test data, spark plugs
- Remove and install with spark plug spanner 3122B

1.4 - Safety precautions

To prevent injuries to persons and/or damage to the injection and ignition system, the following must be observed:

Protected by copyright. Copyright by Volkswagen AG. Volkswagen AG does not guarantee or accept any liability with respect to the correctness of information in this document. Copyright by Volkswagen AG. Copying in part or in whole, is not permitted unless authorised by Volkswagen AG.
satelettronica

- Do not touch or pull off ignition wiring when engine is running or turning at starter speed.
- The ignition must be switched off when disconnecting or connecting injection and ignition system wiring as well as test instrument cables.
- If the engine is to be turned at starter speed, without starting:

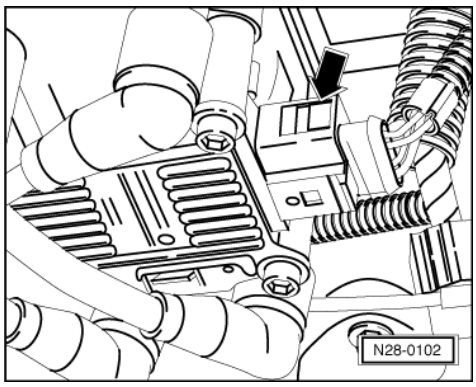

- -> Pull 4 pin connector off ignition transformer (N152) -arrow-.

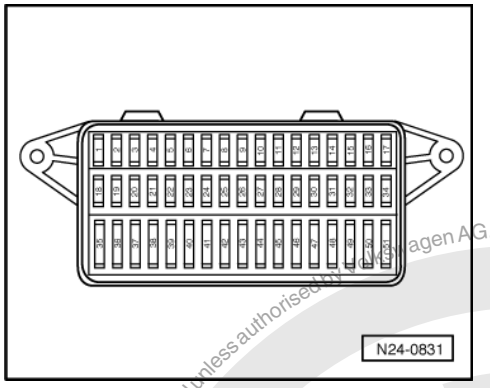

- -> Pull fuel pump fuse No. 40 out of fuse holder.

Observe following if test and measuring instruments are required during a test drive:

- Test and measuring instruments must be secured to rear seat and operated by a 2nd person from this location.

  If test and measuring instruments are operated from front passenger's seat and the vehicle is involved in an accident, there is a possibility that the person sitting in this seat may receive serious injuries when the airbag is triggered.

1.5 - Test data, spark plugs

Engine code	ARC, AVY
Firing order	1-3-4-2
Spark plugs1)	
VW/Audi	101 000 033 AA
Manufacturer's designation	BKUR 6 ET-10
Electrode gap	0.9...1.1 mm

Protected by copyright. Copying for private or commercial purposes, in whole or in part, is not permitted unless authorised by Volkswagen AG. Volkswagen AG does not guarantee or accept any liability with respect to the correctness of information in this document. Copyright by Volkswagen AG.
satelettronica

Engine code	ARC, AVY
Tightening torque	30 Nm

1) For up-to-date specifications also for spark plug change intervals.

=> Exhaust emissions test binder

1.6 - Checking Hall sender

Protected by copyright. Copying for private or commercial purposes, in part or in whole, is not permitted unless authorised by Volkswagen AG. Volkswagen AG does not guarantee or accept any liability with respect to the correctness of information in this document. Copyright by Volkswagen AG.

satelettronica

Special tools, workshop equipment, testers, measuring instruments and auxiliary items required

- Hand multimeter V.A.G 1526 or multimeter V.A.G 1715
- Adapter set V.A.G 1594
- Test box V.A.G 1598/31
- Current flow diagram

Check conditions

- Self-diagnosis has detected a fault with the Hall sender => Page 8 , Interrogating and erasing fault memory.
- The battery voltage must be at least 11.5 V.
- All electrical consumers, e.g. lights and rear window heating must be switched off.
- If the vehicle is equipped with an air conditioning system, this must be switched off.

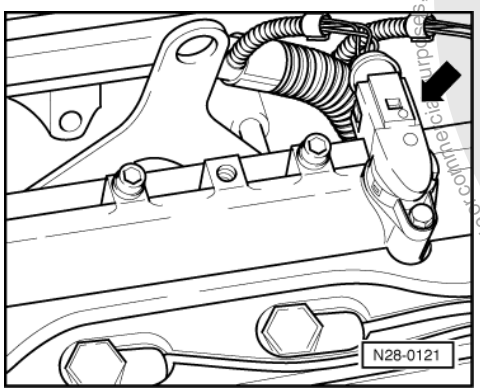

Test sequence

- Remove cover over camshaft housing =>Page 76 , Fig. 1 .
- -> Pull 3-pin connector off Hall sender -arrow-.

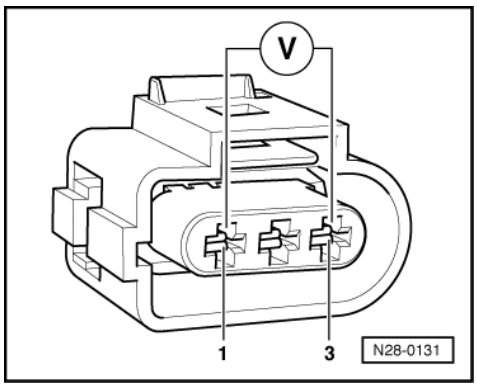

- -> Connect multimeter to measure voltage using aux. cables from V.A.G 1594 to contacts 1 (positive) and 3 (earth) on Hall sender connector.
- Switch on ignition.
  Specification: min. 4.5 V

- Switch off ignition.

If no voltage is present:

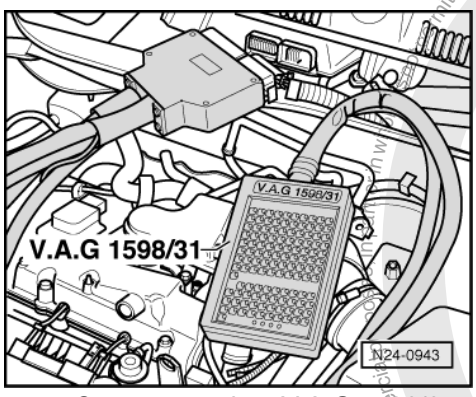

- -> Connect test box V.A.G 1598/31 to control unit wiring harness. The engine control unit remains disconnected.

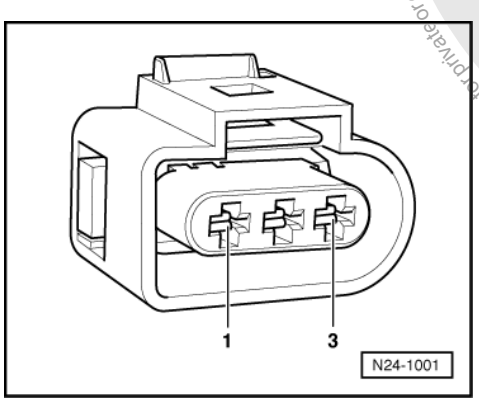

- -> Check wiring for open circuit between test box and 3-pin connector referring to current flow diagram.
  Contact 1 and test box socket 96
  Contact 2 and test box socket 105
  Contact 3 and test box socket 83
  Wire resistance: max. 1.5 ω
- Additionally check wires for short to one another, to vehicle earth and to battery positive.
  Specification: ∞ω

If no wiring fault is detected and voltage was present between contacts 1 + 3:

- Replace Hall sender (G40)
  =>Page 148 , item 11 .
- Interrogate fault memory, if necessary, repair any faults and then erase fault memory => Page 8 , interrogating and erasing fault memory.
- Erase the learnt values and adapt the engine control unit again=> Page 128 .

If no wiring fault is detected and voltage was present between contacts 1 + 3:

- Replace engine control unit
  => Page 126 .

1.7 - Checking ignition transformer

Special tools, workshop equipment, testers, measuring instruments and auxiliary items required

- Hand multimeter V.A.G 1526 or multimeter V.A.G 1715
- Diode test lamp V.A.G 1527
- Adapter set V.A.G 1594
- Test box V.A.G 1598/31

Protected by copyright. Copying for private or commercial purposes, in part or in whole, is not permitted unless authorised by Volkswagen AG. Volkswagen AG does not guarantee or accept any liability with respect to the correctness of information in this document. Copyright by Volkswagen AG.
satelettronica

- Current flow diagram

Check conditions

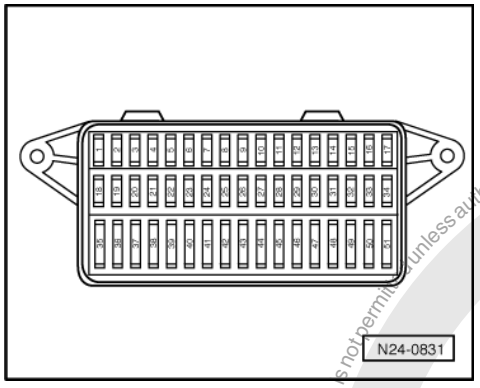

- -> Fuse No. 34 must be OK.
- Battery voltage at least 11.5 V
- All electrical consumers, e.g. lights and rear window heating must be switched off.
- If the vehicle is equipped with an air conditioning system, this must be switched off.
- Engine speed sender must be OK, checking =>Page 98 .
- The Hall sender must be OK,
  checking => Page 150 .

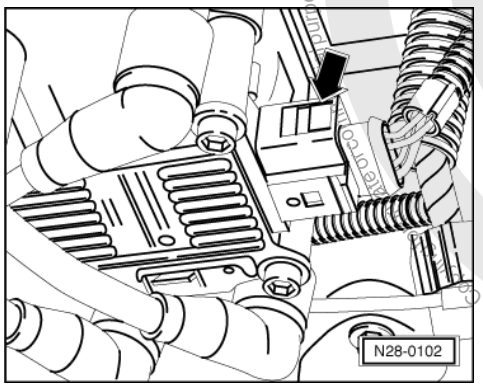

Test sequence

- Remove cover over camshaft housing =>Page 76 , Fig. 1 .
- -> Pull 4 pin connector off ignition transformer (N152) -arrow-.

Checking voltage supply

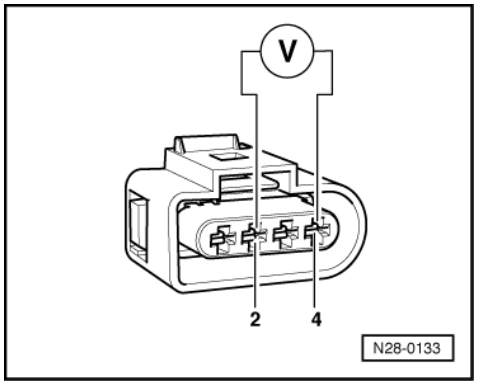

- -> Using multimeter and adapter cables from V.A.G 1594 measure the supply voltage between contacts 2 (positive) + 4 (earth) of disconnected connector.
- Switch on ignition.
  Specification: min. 11.5 V

Protected by copyright. Copyright by Volkswagen AG. Volkswagen AG does not guarantee or accept any liability with respect to the correctness of information in this document. Copyright by Volkswagen AG. Volkswagen AG does not permit unless authorised by Volkswagen AG. Volkswagen AG
satelettronica

- Switch off ignition.

If no voltage is present:

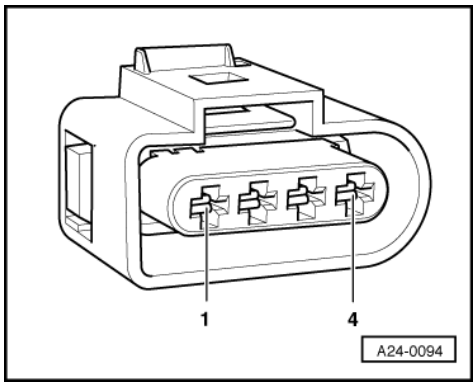

- -> Check wire between 4 pin connector contact 2 and relay plate for open circuit according to current flow diagram.
  Wire resistance: max. 1.5 ω
- Check wire between 4 pin connector contact 4 and earth for open circuit according to current flow diagram.
  Wire resistance: max. 1.5 ω

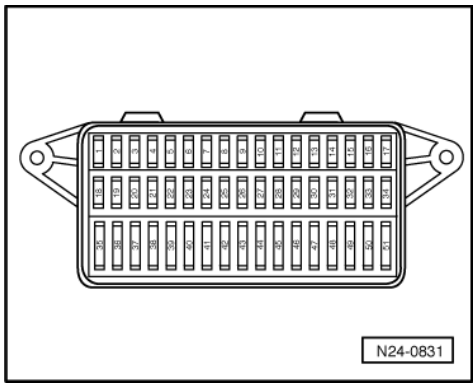

Checking activation

Warning! During the following test do not touch the terminals of the ignition transformer or test cables.

- -> Pull fuel pump fuse No. 40 out of fuse holder.

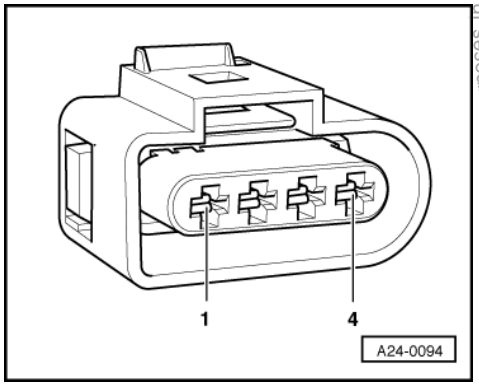

- -> Connect diode test lamp V.A.G 1527 with adapter cables from V.A.G 1594 to
  contacts 1 + 4 (ignition output 1),
  contacts 3 + 4 (ignition output 2)
  of disconnected connector.
- Get a 2nd person to operate starter and check the ignition signal from engine control unit.
  The LED must flicker

satelettronica
Protected by copyright. Copying for private or commercial purposes, in part or in whole, is not permitted unless authorised by Volkswagen AG. Volkswagen AG does not guarantee or accept any liability with respect to the correctness of information in this document. Copyright by Volkswagen AG.

Protected by copyright. Copyright by Volkswagen AG. Volkswagen AG does not guarantee or accept any liability with respect to the correctness of information in this document. Reproduction of whole, or in part, not permitted unless authorised by Volkswagen AG.

- Switch off ignition.

If the LED flickers and there is voltage between contacts 2 + 4:

- Replace ignition transformer (N152)
  => Page 147, item 4 .

The LED does not flicker:

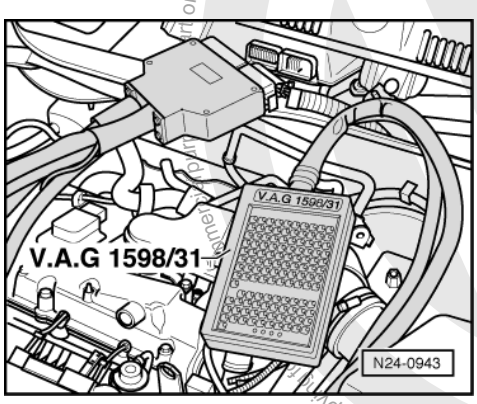

- -> Connect test box V.A.G 1598/31 to control unit wiring harness. The engine control unit remains disconnected.

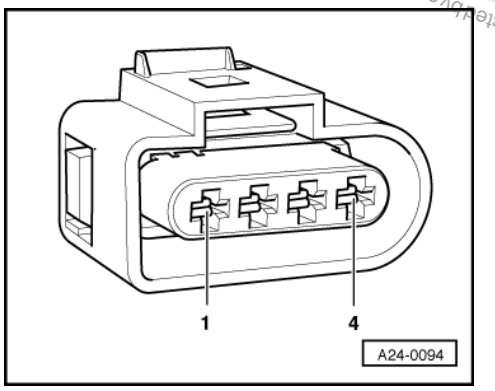

- -> Check wiring for open circuit between test box and 4-pin connector referring to current flow diagram.
  Contact 1 and test box socket 112
  Contact 3 and test box socket 113
  Wire resistance: max. 1.5 ω
- Additionally check wires for short to one another, to vehicle earth and to battery positive.
  Specification: ∞ω

If no wiring fault is detected and voltage was present between contacts 2+4:

- Replace engine control unit
  => Page 126 .

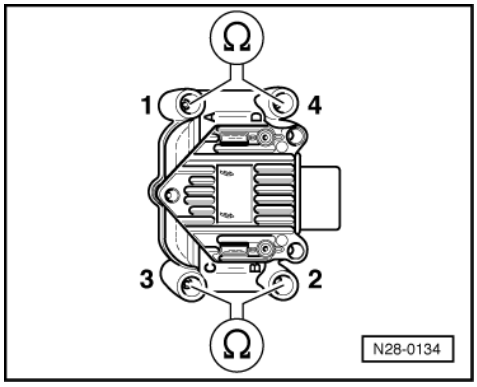

satelettronica

Checking secondary resistance

- -> Check the secondary resistance on terminal 4 between
  Cyl. 1+Cyl. 4,
  Cyl. 2+Cyl. 3.
  Specification: 4.0... 6.0 kω (at room temperature)

If the specifications are not attained:

- Replace ignition transformer (N152)
  => Page 147 , item 4 .

1.8 - Checking knock sensor

Notes:

- It is extremely important to keep to the tightening torque of 20 Nm to ensure the knock sensors perform perfectly.
- The knock sensor might misinterpret vibrations of loose components as knocking. Therefore check that engine ancillaries are securely mounted.
- Only gold-plated contacts may be used when servicing the knock sensor connector contacts.

Special tools, workshop equipment, testers, measuring instruments and auxiliary items required

- Hand multimeter V.A.G 1526 or multimeter V.A.G 1715
- Fault reader V.A.G 1551 or vehicle system tester V.A.G 1552 with cable V.A.G 1551/3
- Adapter set V.A.G 1594
- Test box V.A.G 1598/31
- Current flow diagram

Check conditions

- Self-diagnosis has detected a fault on the knock sensor =>Page 8 , Interrogating and erasing fault memory.
- The engine speed must be at least 2500 rpm =>display group 28, display zone 1
- The engine load musts be at least 40.0 % =>display group 28, display zone 2
- Coolant temperature must be at least 85 °C, =>display group 28, display zone 3.

Functional check

- Connect fault reader V.A.G 1551 (V.A.G 1552). Start engine and select "Address word" 01 of engine control unit. When doing this the engine must be running at idling speed.
  (Connecting fault reader and selecting engine control unit => Page 4 .)

-> Indicated on display:

```
Rapid data transfer     HELP
Select function XXX
```

- Press keys 0 and 8 for the function "Read measured value block" and confirm entry with Q key.

-> Indicated on display:

```
Read measured value block
Input display group number XXX
```

- Press keys 0, 2 and 8 for the "Display group number 28" and confirm entry with Q key.

-> Indicated on display:
(1...4 = Display zones)

```
Read measured value block 28
     1     2     3     4
```

satelettronica

Note:

Checking the knock sensors must be performed during a test drive because the diagnosis of the knock sensors is not activated until the engine speed exceeds 2500 rpm and the engine is loaded by more than 40 %.

- Carry out test drive with a 2nd person to observe display.

Observe the valid safety precautions when carrying out a test drive => Page 148 .

- Check specification for knock control in display zone 4.
  Specification: Sys. OK.
- Press ⇒key.
- Press keys 0 and 6 for the function "End output" and confirm entry with the Q key.
- Switch off ignition.

If the specification is not obtained:

- Check resistance and wiring of knock sensor => Page 156 .

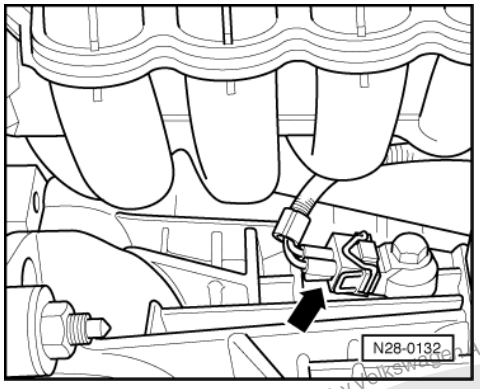

Checking resistance and wiring of knock sensor

- Remove noise insulation tray.
- -> Pull 2 pin connector off knock sensor (G61) -arrow-.

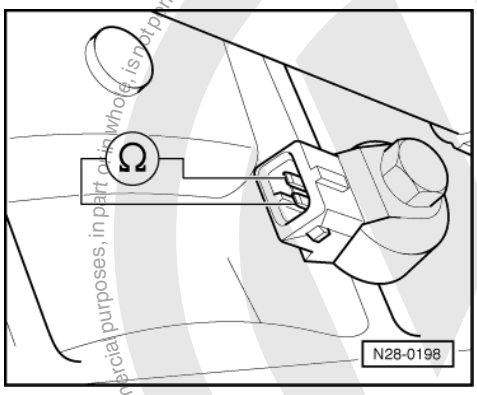

- -> Measure resistance of knock sensor between contact 1 (signal) and contact 2 (earth).
  Specification: ∞ω

If the specification is not obtained:

- Replace knock sensor (G61) =>Page 147 , item 8 .
- Interrogate fault memory, if necessary, repair any faults and then erase fault memory => Page 8 , interrogating and erasing fault memory.
- Erase the learnt values and adapt the engine control unit again=> Page 128 .

If the specification is obtained:

Protected by copyright. Copying for private or commercial purposes, in part or in whole, is not permitted unless authorised by Volkswagen AG. Volkswagen AG does not guarantee or accept any liability with respect to the correctness of information in this document. Copyright by Volkswagen AG.
satelettronica

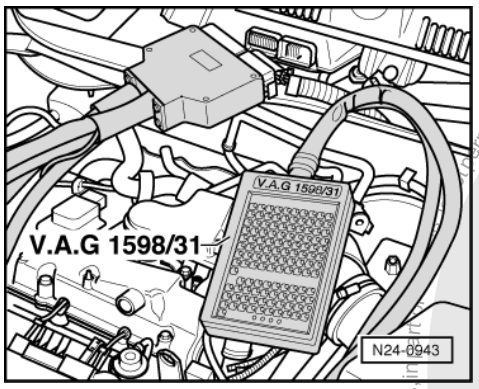

- -> Connect test box V.A.G 1598/31 to control unit wiring harness. The engine control unit remains disconnected.

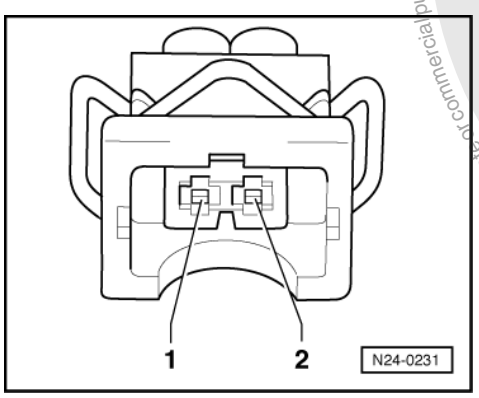

- -> Check wiring for open circuit between test box and 2-pin connector referring to current flow diagram:
  Contact 1 and test box socket 109
  Contact 2 and test box socket 101
  Wire resistance: max. 1.5 ω
- Additionally check wires for short to one another, to vehicle earth and to battery positive.
  Specification: ∞ω

If no fault is detected in the wiring:

- Loosen knock sensor and tighten again to 20 Nm.
- Perform a test drive again and check knock control specifications on display.

Observe the valid safety precautions when carrying out a test drive => Page 148 .

During the road test the following operating conditions must be fulfilled:
- The coolant temperature must exceed 80 °C .
- When the temperature is reached, the operating conditions
  Idling
  Part throttle
  Enrichment
  Full throttle
  Overrun
  must be attained several times.
- At full throttle the speed must exceed 3500 rpm.

- Again interrogate the control unit fault memory.

If the fault is still present:

- Replace knock sensor (G61) =>Page 147 , item 8 .
- Interrogate fault memory, if necessary, repair any faults and then erase fault memory => Page 8 , interrogating and erasing fault memory.
- Erase the learnt values and adapt the engine control unit again=> Page 128 .

Protected by copyright. Copying for private or commercial purposes, in part or in whole, is not permitted unless authorised by Volkswagen AG. Volkswagen AG does not guarantee or accept any liability with respect to the correctness of information in this document. Copyright by Volkswagen AG.
satelettronica

1.9 - Check misfiring recognition

Special tools, workshop equipment, testers, measuring instruments and auxiliary items required

- Fault reader V.A.G 1551 or vehicle system tester V.A.G 1552 with cable V.A.G 1551/3

Test sequence

- Connect fault reader V.A.G 1551 (V.A.G 1552). Start engine and select "Address word" 01 of engine control unit. When doing this the engine must be running at idling speed.
  (Connecting fault reader and selecting engine control unit => Page 4 .)

-> Indicated on display:

```
Rapid data transfer     HELP
Select function XXX
```

- Press keys 0 and 8 for the function "Read measured value block" and confirm entry with Q key.

-> Indicated on display:

```
Read measured value block
Input display group number XXX
```

- Press keys 0, 1 and 4 for "Display group number 14" and confirm entry with Q key.

-> Indicated on display:
(1...4 = Display zones)

```
Read measured value block 14
     1     2     3     4
```

- Check misfire recognition status in display zone 4.
  Specification: "activated"
- Check total number of misfires since engine was started in display zone 3:
  Specification: 0...20

Note:

The specification is only valid for a period of max. 5 minutes after the engine was started.

If the specifications are obtained:

- Press ⇒key.
- Press keys 0 and 6 for the "End output" function and confirm input with the Q key.
- Switch off ignition.

If the specifications are not attained:

- Change to display group 15 as follows:
  V.A.G 1551: Press key 3
  V.A.G 1552: Press key ↑

-> Indicated on display:
(1...4 = Display zones)

```
Read measured value block 15
     1     2     3     4
```

- Check misfire recognition status in display zone 4.
  Specification: "activated"
- Check misfiring of cyl. 1...cyl. 3 since engine was started in display zones 1...3.
  Specification: 0...5

satelettronica

Note:

The specification is only valid for a period of max. 5 minutes after the engine was started.

If the specifications are not obtained:

- Press ⇒key.
- Press keys 0 and 6 for the "End output" function and confirm input with the Q key.
- Switch off ignition.
- =>Page 39 , Evaluating display group 15 and display group 16.

If the specifications are obtained:

- Change to display group 16 as follows:
  V.A.G 1551: Press key 3
  V.A.G 1552: Press key ↑

-> Indicated on display:
(1...4 = Display zones)

```
Read measured value block 16
     1     2     3     4
```

- Check misfire recognition status in display zone 4.
  Specification: "activated"
- Check misfiring of cyl. 4 since engine was started in display zone 1
  Specification: 0...5
- Press ⇒key.
- Press keys 0 and 6 for the "End output" function and confirm input with the Q key.
- Switch off ignition.

If the specification is not attained:

- =>Page 39 , Evaluating display group 15 and display group 16.

Protected by copyright. Copying for private or commercial purposes, in part or in whole, is not permitted unless authorised by Volkswagen AG. Volkswagen AG does not guarantee or accept any liability with respect to the correctness of information in this document. Copyright by Volkswagen AG.
satelettronica